From Dense Dilute Duality to Self-Duality of High Energy QCD.

Michael Lublinsky

University of Connecticut

In collaboration with Alex Kovner

High Energy Evolution

Target ($\rho^t = \rho^+;\ k^+ > \Lambda$) Projectile ($\rho^p = \rho^-;\ k^- > \Lambda$)

$$\langle T| \quad \rightarrow \qquad\qquad \leftarrow \quad |P\rangle$$

S-matrix:

$$S(Y) \;=\; \langle T\,\langle\, P|\ \hat{s}(\rho^t,\,\rho^p)\ |P\rangle\, T\rangle$$

Projectile averaged s-matrix:

$$\Sigma^p_{Y\,-\,Y_0}(\rho^t) \;=\; \langle\, P|\ \hat{s}(\rho^t,\,\rho^p)\ |P\rangle$$

$$\Sigma^p_{Y\,-\,Y_0}(\rho^t) \;=\; \int D\rho^p\ \ \hat{s}(\rho^t,\,\rho^p)\ \ W^p_{Y\,-\,Y_0}[\rho^p]$$

$$S(Y) \;=\; \int D\rho^t\ \ \Sigma^p_{Y\,-\,Y_0}[\rho^t]\ \ W^t_{Y_0}[\rho^t]$$

Boosting projectile $\quad |P\rangle_Y \;\rightarrow\; |P\rangle_{Y+\delta Y} \quad$ (QCD)

$$\frac{d\Sigma^p}{dY} \;=\; \chi_\Sigma^{HE}\;\Sigma^p$$

Boosting target $\quad |T\rangle_Y \;\rightarrow\; |T\rangle_{Y+\delta Y} \quad$ (QCD)

$$\frac{dW^t}{dY} \;=\; \chi_W^{HE}\;W^t$$

Lorentz invariance:

$$\frac{dS}{dY_0} \;=\; 0 \quad\rightarrow\quad \chi_\Sigma^{HE} \;=\; \chi_W^{HE}$$

S-matrix evolution:

$$\frac{dS}{dY} \;=\; \int D\rho^t\;\;\Sigma^p_{Y-Y_0}[\rho^t]\;\;\chi^{HE}[\rho^t]\;\;W^t_{Y_0}[\rho^t]$$

JIMWLK

Balitsky-JIMWLK equation is an evolution of a very dense target W^t and a very dilute projectile Σ^p: $\chi^{JIMWLK} = \chi^{HE}(\rho^t \to \infty)$

Strong classical field generated by the color charge ρ_t

$$\Delta\, \alpha_t^a(z) \;''=''\; \rho_t^a(z) \qquad\qquad (YM \;\; LC)$$

Eikonal scattering matrix for a projectile's gluon scattering off $|T\rangle$:

$$S(z) \;=\; P\, exp\left\{ i \int dx^-\, T^a\, \alpha_t^a(z,\, x^-) \right\}$$

$$\chi^{JIMWLK}\,(\,\rho_t \to \infty\,) \;=$$

$$= \alpha_s \int_{x,y,z} \frac{(z-x)_i}{(z-x)^2}\, \frac{\delta}{\delta\alpha_t^a(x)}\; [1 - S(z)]^{ab}\; \frac{\delta}{\delta\alpha_t^b(y)}\, \frac{(z-y)_i}{(z-y)^2}$$

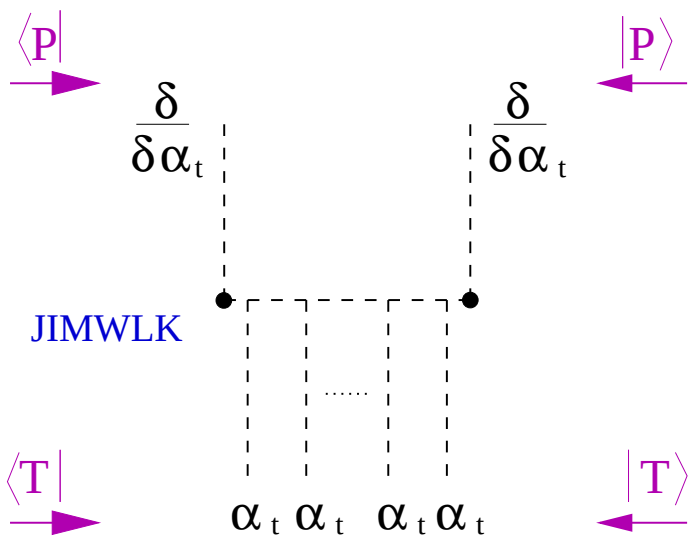

JIMWLK+

A. Kovner and M.L., JHEP 0503:001,2005

$$\chi^{JIMWLK+} = \alpha_s \int_z b_i^a \left[\frac{\delta}{\delta\alpha}\right] \; [1 - S(z)]^{ab} \; b_i^b \left[\frac{\delta}{\delta\alpha}\right]$$

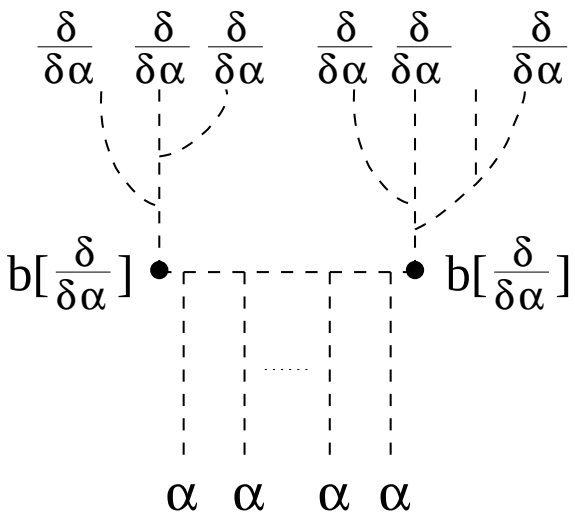

JIMWLK+

$$D_i[b]\, b_i^a = j^a; \qquad D_{[i}\,,\, b_{j]}^a = 0$$

b - Non-linear classical Coulomb field

JIMWLK+ equation is an evolution of a dense but not very dense target W^t and a dilute but not very dilute projectile Σ^p:

$$b_i^a[j] = \int_x \frac{(x - z)_i}{(x - z)^2}\, j^a(x); \qquad j^a \to 0$$

$$\boxed{\chi^{JIMWLK+} \to \chi^{JIMWLK}}$$

KLWMIJ+

A. Kovner and M.L., Phys.Rev.D71:085004, 2005

Evolution of a dilute target:

$$\chi^{KLWMIJ+} \;=\; \alpha_s \int_z b_i^a\,[\rho]\;\;[1\,-\,R(z)]^{ab}\;\;b_i^b\,[\rho]$$

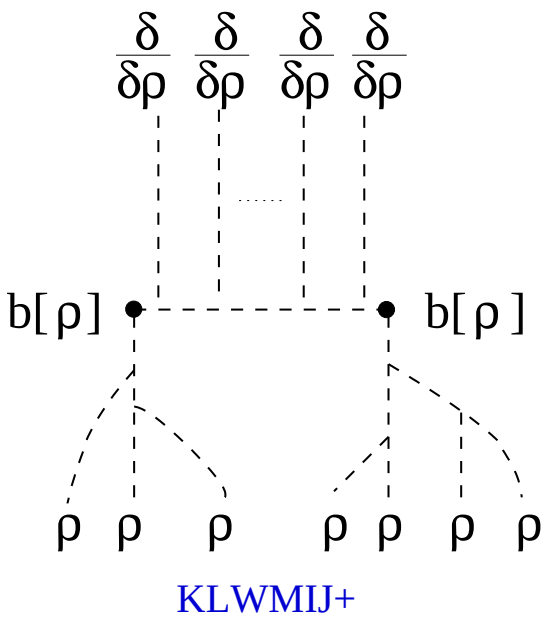

$$R(z) \;=\; P\,exp\left\{\int dx^-\,T^a\,\frac{\delta}{\delta\rho_t^a(z,\,x^-)}\right\}$$

R - dual Wilson line

Evolution with Pomeron Loops (model):

$$\chi^{HE} \;=\; \chi^{JIMWLK+}\;''+''\;\chi^{KLWMIJ+}$$

DDD - Dense Dilute Duality

$$\chi^{JIMWLK+} = \alpha_s \int_z b_i^a \left[\frac{\delta}{\delta\alpha}\right] \; [1 - S(z)]^{ab} \; b_i^b \left[\frac{\delta}{\delta\alpha}\right]$$

$$\chi^{KLWMIJ+} = \alpha_s \int_z b_i^a [\rho] \; [1 - R(z)]^{ab} \; b_i^b [\rho]$$

DDD transformation:

$$i\,\alpha \to \frac{\delta}{\delta\,\rho}; \qquad \frac{\delta}{\delta\alpha} \to i\,\rho \qquad S \to R$$

$$\boxed{dense \leftrightarrow dilute}$$

large ρ $\quad \boxed{\chi^{JIMWLK+} \leftrightarrow \chi^{KLWMIJ+}} \quad$ small ρ

$\rho \to \infty$ $\quad \boxed{\chi^{JIMWLK} \leftrightarrow \chi^{KLWMIJ}} \quad$ $\rho \to 0$

Self-Duality of High Energy Evolution

A. Kovner and M.L. PRL 94:181603,2005

- Lorentz Invariance (LI)
- Eikonal Approximation (EA)
- Projectile - Target Democracy (PTD)

$$\boxed{\chi^{HE}(i\,\alpha\ ,\delta/\delta\,\alpha) \;=\; \chi^{HE}(\delta/\delta\,\rho,\ i\,\rho)}$$

•LI : $\dfrac{dW^t}{dY} = \chi^{HE}\left(i\,\alpha, \dfrac{\delta}{\delta\,\alpha}\right) W^t; \qquad \dfrac{d\Sigma^p}{dY} = \chi^{HE}\left(i\,\alpha, \dfrac{\delta}{\delta\,\alpha}\right) \Sigma^p$

•EA : $\Sigma^p(\alpha) \;=\; \displaystyle\int d\,\rho_p\ W^p[\rho_p]\ \exp\left[i\,\alpha\,\rho_p\right]$

$$\chi^{HE}\left(i\,\alpha\,, \frac{\delta}{\delta\,\alpha}\right)\ \Sigma^p \qquad \rightarrow \qquad \frac{dW^p}{dY} = \chi^{HE}\left(\frac{\delta}{\delta\,\rho},\ i\,\rho\right)\ W^p[\rho]$$

•PTD $\qquad \dfrac{dW^p}{dY} = \chi^{HE}\left(i\,\alpha, \dfrac{\delta}{\delta\,\alpha}\right) W^p$

Dipole evolution

Dipole evolution of a small projectile ($N_c \to \infty$)

$$\chi_p^{dipole} = \bar{\alpha}_s \int_{x,y,z} K^{BFKL}_{x\,y\,z} \left[d^\dagger(x,\, z)\, d^\dagger(y,z) \,-\, d^\dagger(x,y) \right] d(x,y)$$

E. Levin and M.L. **NPA730** (2004) 191

$$d^\dagger(x,y) \,=\, tr[S^\dagger(x)\, S(y)]$$

Classical branching process. Violates t-channel unitarity. No Ploops!

$$\boxed{\chi^{JIMWLK} \,=\, \chi_p^{dipole} \,+\, \frac{1}{N_c^2}\, \chi^{cc}}$$

A. Kovner and M.L., JHEP 0503:001,2005

$$\boxed{\chi^{KLWMIJ} \,=\, \chi_t^{dipole} \,+\, \frac{1}{N_c^2}\, \chi^{cc}}$$

A. Kovner and M. L., hep-ph/0503155

Dipole evolution with Pomeron loops

2-d Pomeron field theory: E. Levin and M.L., hep-ph/0501173

$$\boxed{\chi \;=\; \chi_p^{dipole} \;+\; \chi_p^{2\to 1}}$$

$$\chi^{2\to 1} \;=\; \int \Gamma^{2\to 1}_{x\,y\,u\,v\,r\,p} \left[d^\dagger(x,y) \;-\; d^\dagger(u,v)\, d^\dagger(r,p) \right] \, d(u,v)\, d(r,p)$$

$\Gamma^{2\to 1}$ - inverted Triple Pomeron Vertex

E. Iancu and D. Triantafyllopoulos, hep-ph/0501193

A. Mueller, A. Shoshi and S. Wong, hep-ph/0501088

A. Kovner and M. L., hep-ph/0503155

$$b_i \left[\frac{\delta}{\delta\alpha}\right] \;=\; i\, R_F^\dagger\, \partial_i\, R_F \qquad\qquad b_i\,[\rho] \;=\; i\, S_F^\dagger\, \partial_i\, S_F$$

$$\chi^{BJIMWLK+}\,'' = '' \;\alpha_s \int_z Tr\,\left[\partial_i\, R\, \partial_i\, R^\dagger \;-\; \partial_i\, R\, S^\dagger\, \partial_i\, R^\dagger\, S\right]$$

$$\chi^{BKLWMIJ+}\,'' = '' \;\alpha_s \int_z Tr\,\left[\partial_i\, S\, \partial_i\, S^\dagger \;-\; \partial_i\, S\, R^\dagger\, \partial_i\, S^\dagger\, R\right]$$

I. Balitsky, hep-ph/0101042 ?

Y. Hatta, E. Iancu, L. McLerran, A. Stasto and D.N. Triantafyllopoulos, hep-ph/0504182

Self-Duality of JIMWLK+ ?

$$\boxed{\chi^{JIMWLK+} \;=\; \chi^{KLWMIJ+}}$$

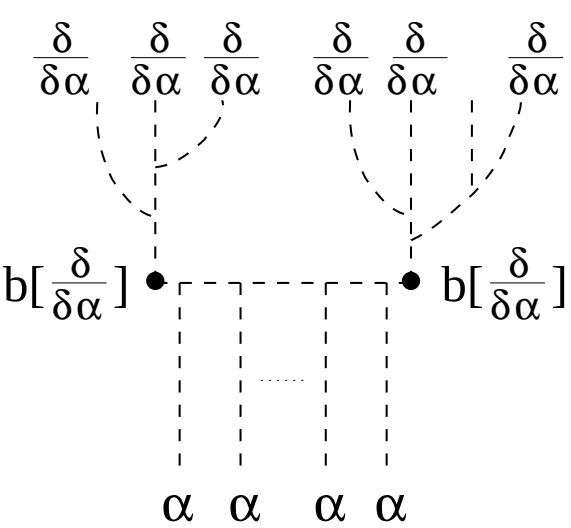

JIMWLK+

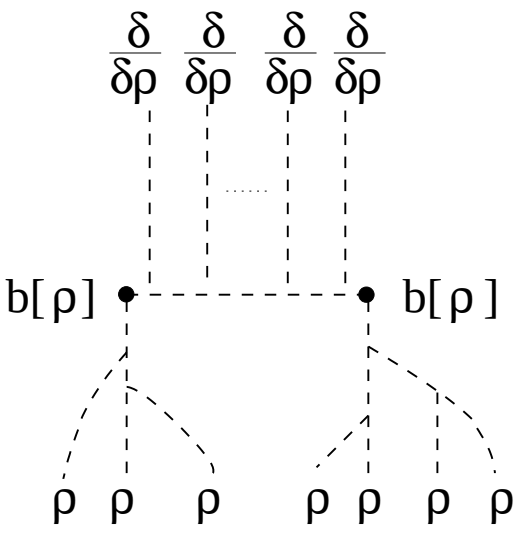

KLWMIJ+

Summary and Outlook

- A lot of progress has been achieved beyond JIMWLK:
  JIMWLK+, KLWMIJ+
  DDD, Self-Duality
  Dipole model with Pom. loops .

- We are in a quest for a complete self-dual evolution kernel for high energy QCD. Lipatov's action?

From Dense Dilute Duality to Self-Duality of High Energy QCD.

Michael Lublinsky

University of Connecticut

In collaboration with Alex Kovner

High Energy Evolution

Target ($\rho^t = \rho^+;\ k^+ > \Lambda$) Projectile ($\rho^p = \rho^-;\ k^- > \Lambda$)

$$\langle T| \quad \rightarrow \qquad\qquad \leftarrow \quad |P\rangle$$

S-matrix:

$$S(Y) \;=\; \langle T\,\langle\, P|\ \hat{s}(\rho^t,\,\rho^p)\ |P\rangle\, T\rangle$$

Projectile averaged s-matrix:

$$\Sigma^p_{Y\,-\,Y_0}(\rho^t) \;=\; \langle\, P|\ \hat{s}(\rho^t,\,\rho^p)\ |P\rangle$$

$$\Sigma^p_{Y\,-\,Y_0}(\rho^t) \;=\; \int D\rho^p\ \ \hat{s}(\rho^t,\,\rho^p)\ \ W^p_{Y\,-\,Y_0}[\rho^p]$$

$$S(Y) \;=\; \int D\rho^t\ \ \Sigma^p_{Y\,-\,Y_0}[\rho^t]\ \ W^t_{Y_0}[\rho^t]$$

Boosting projectile $\quad |P\rangle_Y \;\rightarrow\; |P\rangle_{Y+\delta Y} \quad$ (QCD)

$$\frac{d\Sigma^p}{dY} \;=\; \chi_\Sigma^{HE}\;\Sigma^p$$

Boosting target $\quad |T\rangle_Y \;\rightarrow\; |T\rangle_{Y+\delta Y} \quad$ (QCD)

$$\frac{dW^t}{dY} \;=\; \chi_W^{HE}\;W^t$$

Lorentz invariance:

$$\frac{dS}{dY_0} \;=\; 0 \quad\rightarrow\quad \chi_\Sigma^{HE} \;=\; \chi_W^{HE}$$

S-matrix evolution:

$$\frac{dS}{dY} \;=\; \int D\rho^t\;\;\Sigma^p_{Y-Y_0}[\rho^t]\;\;\chi^{HE}[\rho^t]\;\;W^t_{Y_0}[\rho^t]$$

Dipole evolution with Pomeron loops

Dipole evolution of a small projectile ($N_c \to \infty$)

$$\chi_p^{dipole} = \bar{\alpha}_s \int_{x,y,z} K^{BFKL}_{x\,y\,z} \left[d^\dagger(x,\, z)\, d^\dagger(y,z) \,-\, d^\dagger(x,y) \right] d(x,y)$$

E. Levin and M.L. **NPA730** (2004) 191

Classical branching process. Violates t-channel unitarity. No Ploops!

2-d Pomeron field theory: E. Levin and M.L., hep-ph/0501173

$$\boxed{\chi \;=\; \chi_p^{dipole} \;+\; \chi_p^{2\to 1}}$$

$$\chi^{2\to 1} = \int \Gamma^{2\to 1}_{x\,y\,u\,v\,r\,p} \left[d^\dagger(x,y) \,-\, d^\dagger(u,v)\, d^\dagger(r,p) \right] d(u,v)\, d(r,p)$$

$\Gamma^{2\to 1}$ - inverted Triple Pomeron Vertex

E. Iancu and D. Triantafyllopoulos, hep-ph/0411405; hep-ph/0501193

A. Mueller, A. Shoshi and S. Wong, hep-ph/0501088

A. Kovner and M. L., hep-ph/0503155

From dipole model to finite N_c

Balitsky-JIMWLK equation is an evolution of a very dense target W^t and a very dilute projectile Σ^p:

$$\chi^{JIMWLK} = \chi^{HE}(\rho^t \to \infty)$$

$$\frac{dW^t[\rho^t]}{dY} = \chi^{JIMWLK}[\rho^t] \; W^t[\rho^t]$$

$$\frac{d\Sigma^p[\rho^t]}{dY} = \chi^{JIMWLK}[\rho^t] \; \Sigma^p[\rho^t]$$

Dipole Limit (Large N_c):

$$\boxed{\chi^{JIMWLK} = \chi_p^{dipole} + \frac{1}{N_c^2}\chi^{cc}}$$

A. Kovner and M.L., JHEP 0503:001,2005

Strong classical field generated by the color charge ρ_t

$$\Delta\, \alpha_t^a(z) \;''=''\; \rho_t^a(z) \qquad\qquad (YM \;\; LC)$$

Eikonal scattering matrix for a projectile's gluon scattering off $|T\rangle$:

$$S(z) \;=\; P\, exp\left\{ i \int dx^-\, T^a\, \alpha_t^a(z,\, x^-) \right\}$$

$$\chi^{JIMWLK}\,(\,\rho_t \;\rightarrow\; \infty\,) \;=$$

$$= \alpha_s \int_{x,y,z} \frac{(z-x)_i}{(z-x)^2}\, \frac{\delta}{\delta\alpha_t^a(x)}\; [1 \,-\, S(z)]^{ab}\; \frac{\delta}{\delta\alpha_t^b(y)}\, \frac{(z-y)_i}{(z-y)^2}$$

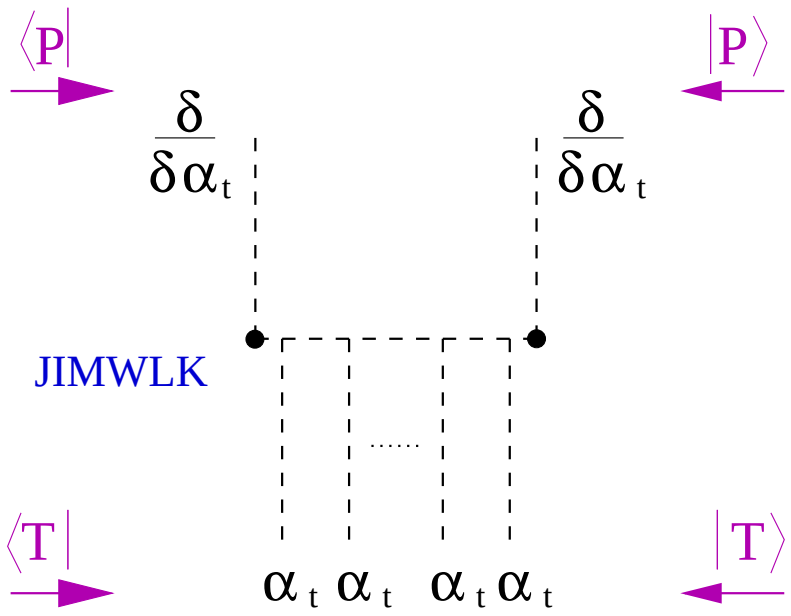

KLWMIJ equation

A. Kovner and M.L., Phys.Rev.D71:085004, 2005

Evolution of a dilute target: $\chi^{KLWMIJ} = \chi^{HE}(\rho_t \to 0)$

$$\chi^{KLWMIJ}(\rho_t \to 0) =$$

$$= \alpha_s \int_{x,y,z} \frac{(z-x)_i}{(z-x)^2} \rho_t^a(x) \; [1 - R(z)]^{ab} \; \rho_t^b(y) \frac{(z-y)_i}{(z-y)^2}$$

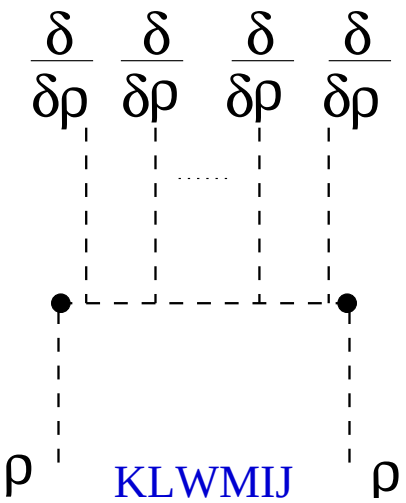

$$R(z) = P\, exp\left\{ \int dx^- \, T^a \frac{\delta}{\delta \rho_t^a(z, x^-)} \right\}$$

$$\boxed{\chi^{KLWMIJ} \to \chi_t^{dipole} \qquad N_c \to \infty}$$

A. Kovner and M.L., hep-ph/0503155

Evolution with Pomeron Loops (model):

$$\chi^{HE} = \chi^{JIMWLK}(\rho_t \to \infty) \; '' + '' \; \chi^{KLWMIJ}(\rho_t \to 0)$$

DDD - Dense Dilute Duality

$$\chi^{JIMWLK}(\rho \to \infty) \;=\; \alpha_s \int_{x,y,z} \frac{(z-x)_i (z-y)_i}{(z-x)^2 (z-y)^2} \;\times$$

$$\times \quad \frac{\delta}{\delta \alpha^a(x)} \left[1 \;-\; S(z)\right]^{ab} \frac{\delta}{\delta \alpha^b(y)}$$

$$\chi^{KLWMIJ}(\rho \to 0) \;=\; \alpha_s \int_{x,y,z} \frac{(z-x)_i (z-y)_i}{(z-x)^2 (z-y)^2} \;\times$$

$$\times \quad \rho^a(x) \left[1 \;-\; R(z)\right]^{ab} \rho^b(y)$$

DDD transformation:

$$i\,\alpha \;\to\; \frac{\delta}{\delta\,\rho}\,; \qquad \frac{\delta}{\delta \alpha} \;\to\; i\,\rho \qquad S \;\to\; R$$

$$\boxed{\chi^{JIMWLK} \;\leftrightarrow\; \chi^{KLWMIJ}}$$

Self-Duality of High Energy Evolution

A. Kovner and M.L. (PRL 94:181603,2005)

- Lorentz Invariance (LI)
- Eikonal Approximation (EA)
- Projectile - Target Democracy (PTD)

$$\boxed{\chi^{HE}(i\,\alpha\ ,\delta/\delta\,\alpha) \;=\; \chi^{HE}(\delta/\delta\,\rho,\ i\,\rho)}$$

•LI : $\dfrac{dW^t}{dY} = \chi^{HE}\left(i\,\alpha, \dfrac{\delta}{\delta\,\alpha}\right) W^t; \qquad \dfrac{d\Sigma^p}{dY} = \chi^{HE}\left(i\,\alpha, \dfrac{\delta}{\delta\,\alpha}\right) \Sigma^p$

•EA : $\Sigma^p(\alpha) \;=\; \displaystyle\int d\,\rho_p\ W^p[\rho_p]\ \exp\left[i\,\alpha\,\rho_p\right]$

$$\chi^{HE}\left(i\,\alpha\,, \frac{\delta}{\delta\,\alpha}\right)\ \Sigma^p \qquad \rightarrow \qquad \frac{dW^p}{dY} = \chi^{HE}\left(\frac{\delta}{\delta\,\rho},\ i\,\rho\right)\ W^p[\rho]$$

•PTD $\qquad \dfrac{dW^p}{dY} = \chi^{HE}\left(i\,\alpha, \dfrac{\delta}{\delta\,\alpha}\right) W^p$

Beyond JIMWLK: $JIMWLK+$

A. Kovner and M.L., JHEP 0503:001,2005

$$\chi^{JIMWLK+} = \alpha_s \int_z b_i^a \left[\frac{\delta}{\delta\alpha}\right] \; [1 - S(z)]^{ab} \; b_i^b \left[\frac{\delta}{\delta\alpha}\right]$$

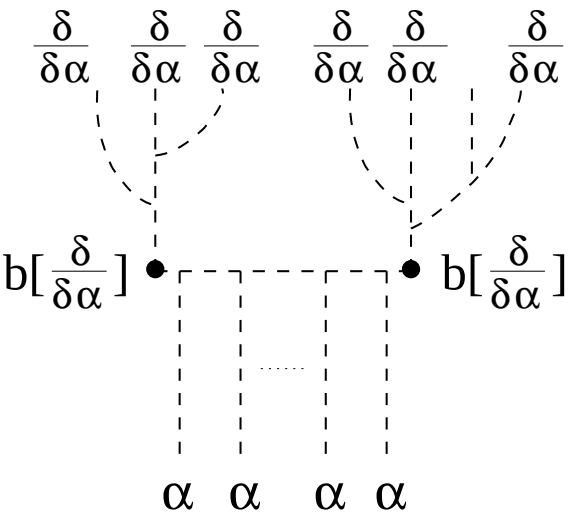

JIMWLK+

$$D_i[b]\, b_i^a = j^a; \qquad D_{[i}\,,\, b_{j]}^a = 0$$

$$b_i^a[j] = \int_x \frac{(x - z)_i}{(x - z)^2}\, j^a(x);$$

$$j^a \to 0$$

$$\chi^{KLWMIJ+} = \alpha_s \int_z b_i^a[\rho] \; [1 - R(z)]^{ab} \; b_i^b[\rho]$$

A. Kovner and M.L., Phys.Rev.D71:085004, 2005

DDD: $\boxed{\chi^{JIMWLK+} \leftrightarrow \chi^{KLWMIJ+}}$

$$b_i \left[\frac{\delta}{\delta\alpha}\right] \;=\; i\, R_F^\dagger\, \partial_i\, R_F \qquad\qquad b_i\,[\rho] \;=\; i\, S_F^\dagger\, \partial_i\, S_F$$

$$\chi^{BJIMWLK+}\,'' = '' \;\alpha_s \int_z Tr\,\left[\partial_i\, R\, \partial_i\, R^\dagger \;-\; \partial_i\, R\, S^\dagger\, \partial_i\, R^\dagger\, S\right]$$

$$\chi^{BKLWMIJ+}\,'' = '' \;\alpha_s \int_z Tr\,\left[\partial_i\, S\, \partial_i\, S^\dagger \;-\; \partial_i\, S\, R^\dagger\, \partial_i\, S^\dagger\, R\right]$$

I. Balitsky, hep-ph/0101042 ?

Y. Hatta, E. Iancu, L. McLerran, A. Stasto and D.N. Triantafyllopoulos, hep-ph/0504182

Self-Duality of JIMWLK+ ?

$$\boxed{\chi^{JIMWLK+} \;=\; \chi^{KLWMIJ+}}$$

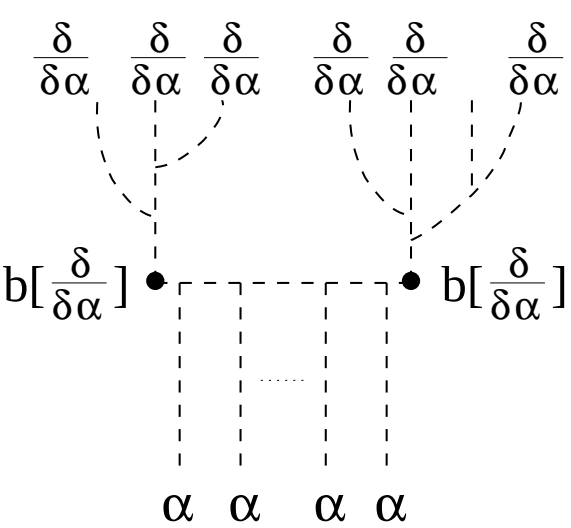

JIMWLK+

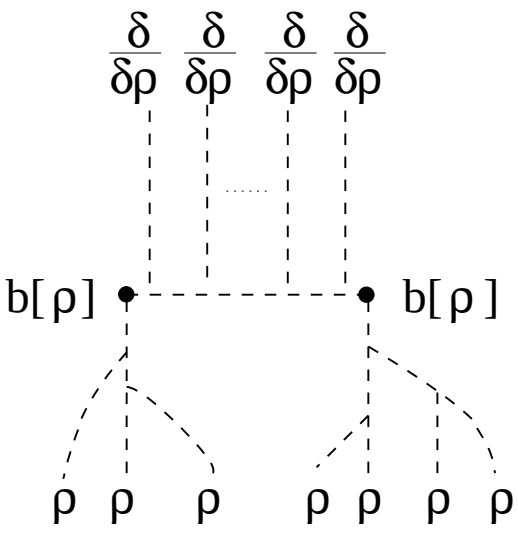

KLWMIJ+

Summary and Outlook

- An effective theory which governs Pomeron dynamics in QCD at high energy and large N_c limit has been constructed.

- A lot of progress has been achieved beyond large N_c:
  JIMWLK+, KLWMIJ+, DDD, Self-Duality.

- We are in a quest for a complete self-dual evolution kernel for high energy QCD. Lipatov's action?

Dipole Picture in QCD

A. Mueller 93

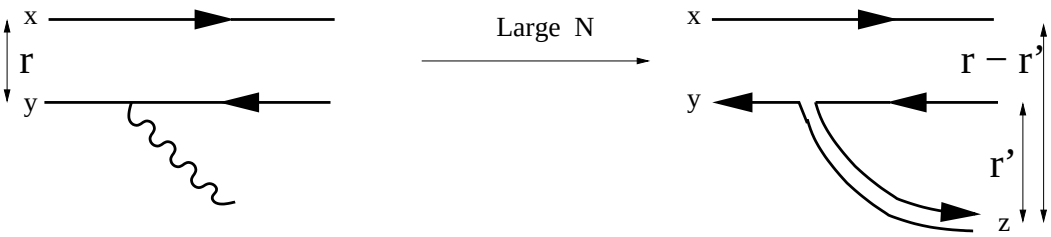

Decay probability = amplitude squared:

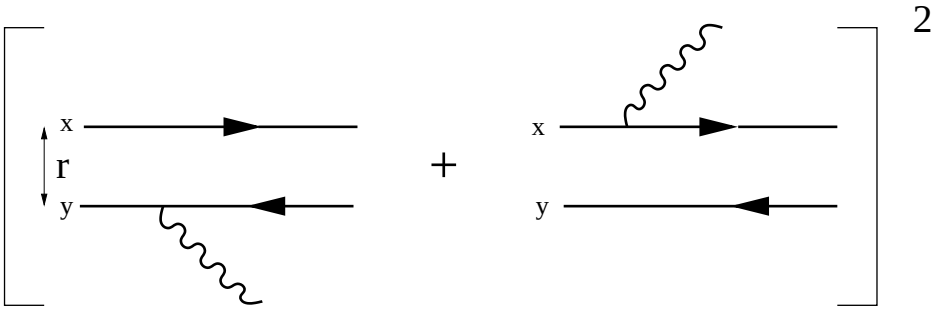

Amplitude is given by the WW field

$$\Gamma(1 \to 2) = \bar{\alpha}_s \left(\frac{(x - z)_i}{(x - z)^2} - \frac{(y - z)_i}{(y - z)^2} \right)^2$$

$$\boxed{\Gamma(1 \to 2) = \bar{\alpha}_s \frac{(x - y)^2}{(x - z)^2 \, (y - z)^2} = \bar{\alpha}_s \frac{r^2}{r'^2 \, (r - r')^2}}$$

Probability Equations

$$\Psi^{projectile} = \sum_n \alpha_n \,|\, n \,\rangle_{dipole}$$

$$P_n\,(Y - Y_0;\, r_1,\, r_2, \ldots r_n) = \alpha_n^2$$

One step in the evolution: $\Gamma(1 \longrightarrow 2)$ governs both the increase and decrease of P_n.

$$\frac{\partial\, P_n}{\partial\, Y} = -\sum \int dPS(2)\,\Gamma(1 \rightarrow 2)\; P_n + \sum \Gamma(1 \rightarrow 2)\; P_{n-1}$$

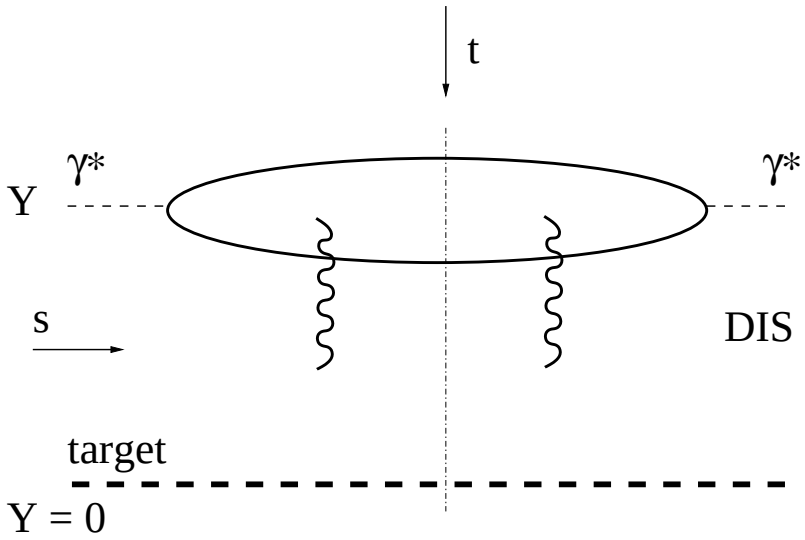

$$\int dPS(2)\,\Gamma(1 \to 2) \;=\; \frac{\bar{\alpha}_s}{2\,\pi}\int_\rho \frac{r^2\,d^2r'}{(r\,-\,r')^2\,r'^2} \;=\; \omega(r)$$

$$\frac{\partial\,P_n\,(\,r_1,\,r_2,\ldots r_n)}{\partial\,Y} \;=\; -\sum_{i=1}^{n}\omega(r_i)\,P_n\,(r_1,\,r_2,\,\ldots r_n)$$

$$+\sum_{i=1}^{n-1}\frac{(r_i\,+\,r_n)^2}{(2\,\pi)\,r_i^2\,r_n^2}\,\bar{\alpha}_s\;P_{n-1}\,(\,r_1,\,r_2,\ldots(r_i\,+\,r_n),\ldots r_{n-1})$$

E. Levin and M. L., hep-ph/0308279

E. Iancu and A. Mueller, hep-ph/0308315

Conserves probability

Generating functional for dipole wave function

A. Mueller 93 :

$$Z\left(Y - Y_0, [u]\right) \equiv \sum_{n=1} \int P_n\left(Y - Y_0;\, r_1, \ldots, r_n\right) \prod_{i=1}^{n} u(r_i)\, d^2 r_i$$

Probability conservation: At $u = 1$

$$Z\left(Y - y,\, r,\, [u = 1]\right) = 1\,.$$

$s(r) = s(x,\, y)$ - scattering matrix of a single dipole

Eikonal scattering

$$\Sigma^{dipole} = Z[u = s]$$

Linear evolution for generating functional

E. Levin and M.L. **NPA730** (2004) 191

$$\partial Z[s]/\partial Y = \chi[s]\, Z[s]$$

$$\chi^{dipole}[s] = \int_{x,y,z} \Gamma_{1\to 2}\, [s(x,z)\, s(y,z) - s(x,y)]\, \frac{\delta}{\delta s(x,y)}$$

Classical branching process. Violates t-channel unitarity.

No Pomeron loops!

BFKL evolution: $s \simeq 1\,; \quad \gamma = 1 - s$

$$\chi^{BFKL}[\gamma] = \int_{x,y,z} \Gamma_{1\to 2}\, [\gamma_{x\,z} + \gamma_{y\,z} - \gamma_{x\,y}]\, \frac{\delta}{\delta \gamma_{x\,y}}$$

Violates s-channel unitarity.

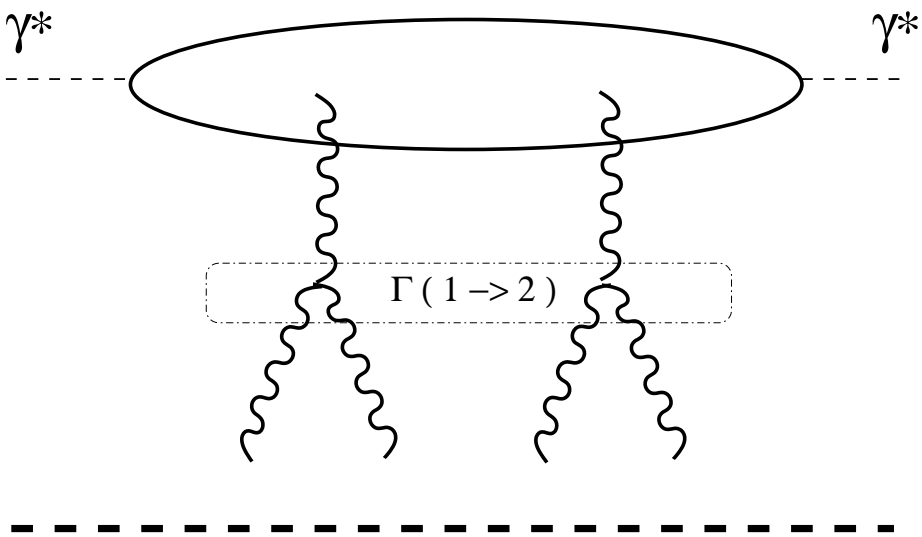
γ*
γ*
Γ (1 –> 2)

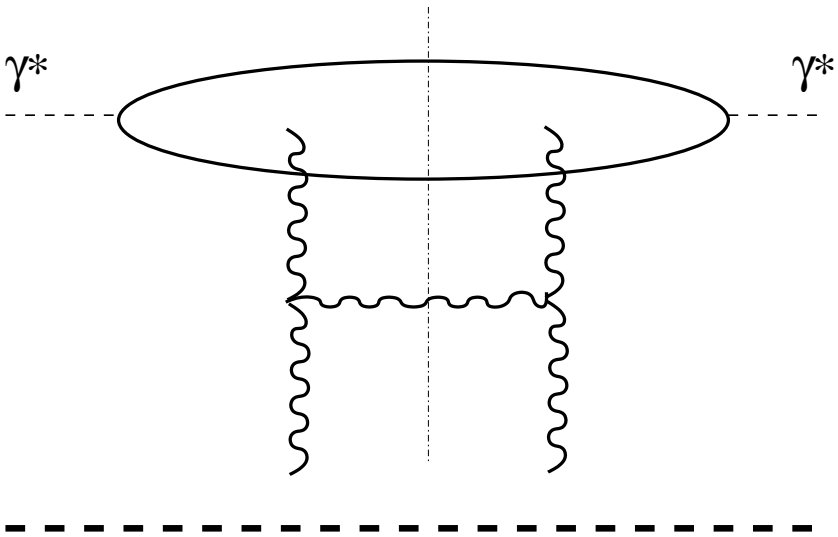
γ*
γ*

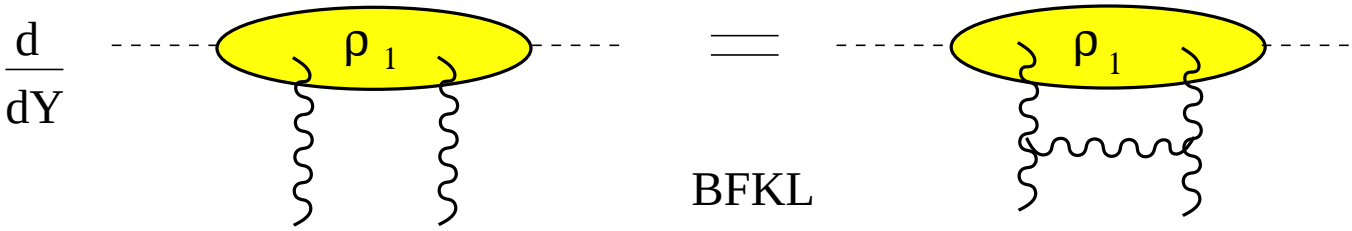
d
dY
ρ 1
BFKL
ρ 1

Kovchegov equation

DIS of a single dipole: $\Sigma^p \;=\; s(x,\, y)$

$$\frac{d\Sigma^p[\,s\,]}{d\,Y} \;=\; \chi^{dipole}[s]\;\Sigma^p[\,s\,] \;\rightarrow$$

$$\frac{d\,s(x,y)}{d\,Y} \;=\; \alpha_s \int_z K^{BFKL}_{x\,y\,z}\;[s(x,\,z)\,s(y,z)\;-\;s(x,y)]$$

Total S-matrix:

$$S_Y(x,\,y) \;=\; \int Ds\;\; s(Y\;-\;Y_0;\,x,\,y)\;W^t_{Y_0}[s]$$

Kovchegov (99): no target correlations (large nucleus)

$$W^t[s] \;\sim\; \delta(s\;-\;s_0)$$

$$S_Y(x,\,y) \;=\; s(Y\;-\;Y_0;\,x,\,y)\,; \qquad S_{Y_0} \;=\; s_0$$

BK equation $\longrightarrow$ HERA phenomenology $\longrightarrow$ LHC

Balitsky's hierarchy

Total S-matrix:

$$S_Y(x,\, y) \;=\; \int Ds\; s(Y \,-\, Y_0;\, x,\, y)\; W^t_{Y_0}[s]$$

Target correlations:

$$S(Y) \;=\; \langle\, s\,\rangle$$

$$d\,\langle\, s\,\rangle\,/\,dY \;=\; \alpha_s \int_z K^{BFKL}_{x\,y\,z}\; [\langle\, s\, s\,\rangle \,-\, \langle\, s\,\rangle]$$

$$d\,\langle\, s\, s\,\rangle\,/\,dY \;\propto\; \langle\, s\, s\, s\,\rangle$$

etc

Balitsky's hierarchy (96)

Balitsky hierarchy

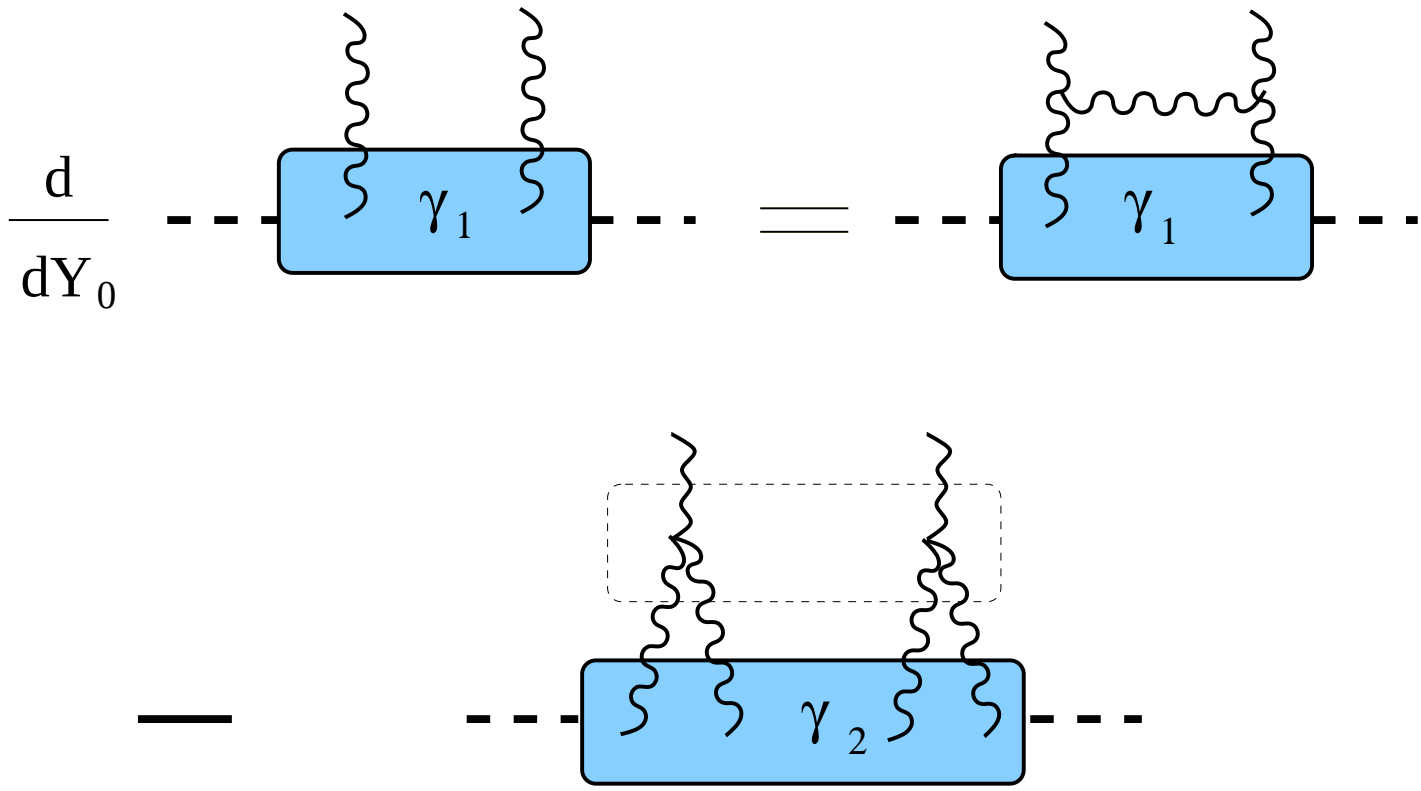

JIMWLK equation

$$N(Y) \;=\; -\sum_{n=1}^{\infty} (-1)^n \int \gamma_n(Y_0)\; \rho_n^p(Y \;-\; Y_0) \;\prod_{i=1}^{n} d^2\, r_i$$

$$\gamma_n(r_1, \ldots r_n;\, Y_0) \;=\; \int D\, s \prod_{i=1}^{n} \left[\, 1 \;-\; \hat{s}(r_i)\, \right] \; W\, (\, Y_0,\, [s]\,)$$

$$N(Y) \;=\; -\sum_{n=1}^{\infty} \frac{(-1)^n}{n!} \int Ds \prod_{i=1}^{n} d^2\, r_i \; [1 \;-\; s_i] \, \frac{\delta}{\delta\, u_i}\, Z[u]|_{u=1}\, W[s]$$

$$N(Y) \;=\; 1 \;-\; \int D\, s \;\; Z\, (Y \;-\; Y_0;\, [s])\;\; W\, (Y_0,\, [s])$$

$$\frac{\partial\, Z[u]}{\partial\, Y} \;=\; \chi[u]\;\; Z[u]$$

$$\frac{\partial N(Y)}{\partial Y} \;=\; -\int D\, s\;\; \chi[s]\;\; Z\,(Y \;-\; Y_0; [s])\;\; W\,(Y_0,\; [s]) \;\; =$$

$$\int D\, s\;\; Z\,(Y \;-\; Y_0;\; [s])\;\; \chi^{\dagger}[s]\;\; W\,(Y_0,\; [s])$$

$$\boxed{\partial\, W(Y_0,\; [s])\,/\,\partial\, Y_0 \;=\; \chi^{\dagger}[s]\;\; W(Y_0,\; [s])}$$

Jalilian-Marian - Iancu - McLerran - Weigert - Leonidov - Kovner

$$\chi[s] \;=\; \hat{K}\;\; [\, s \;-\; s\, s]\;\; \frac{\delta}{\delta\, s}$$

$$\chi^{\dagger}[s] \;=\; \hat{K}^{T}\;\; \frac{\delta}{\delta\, s}\;\; [\, s \;-\; s\, s]$$

Target correlations

Target averaged amplitudes:

$$\gamma_n \;=\; C^{\,n-1}\;\gamma_1^{\,n}$$

C - dipole correlation parameter

Balitsky's hierarchy shrinks to a single equation

$$\frac{d\,\gamma_1}{d\,Y} \;=\; \bar{\alpha}_s\;\hat{K}\;\otimes\;(\,\gamma_1\;-\;C\,\gamma_1\;\gamma_1)$$

Modified BKe

Target correlations at large N_c

A. Kovner and M.L., hep-ph/0502071

$$\frac{\partial\, Z[s]}{\partial\, Y} \;=\; \chi[s]\;\; Z[s]\,; \qquad\qquad \frac{\partial\, W^t[s]}{\partial\, Y} \;=\; \chi[s]\;\; W^t[s]$$

Heisenberg eq. : $$\frac{d\,\hat{s}}{d\,Y} \;=\; [\,\chi[\hat{s}]\,,\;\hat{s}\,]$$

$$\frac{d\,s(x,y)}{d\,Y} \;=\; \bar{\alpha}_s \int d^2z\, K_{xyz}\;\; [s(x,y) \;-\; s(x,z)\, s(y,z)]$$

BKe. Initial conditions: $s(Y \;=\; Y_0) \;=\; s_0$

$$N(Y) \;=\; 1 \;-\; \int D\, s_0 \;\; Z[s(Y)]\; W^t\,(Y_0, [s_0])\;.$$

Needs a model for W^t at $Y \;=\; Y_0$.

Functional evolution with Pomeron loops

E. Levin and M.L., hep-ph/0501173

$$\frac{\partial\, Z[u]}{\partial\, Y} \;=\; \chi[u]\; Z[u]$$

$$\boxed{\chi[u] \;=\; \chi^{1\to 2}[u] \;+\; \chi^{2\to 1}[u]}$$

$$\chi^{1\to 2} \;= -\; V_{1\to 1}[u] \;+\; V_{1\to 2}[u]$$

$$\chi^{2\to 1} \;=\; -\; V_{2\to 2}[u] \;+\; V_{2\to 1}[u]$$

$$V_{1\to 2}[u] \;=\; \int dPS\, \Gamma(1\to 2)\;\; u\, u\, \frac{\delta}{\delta u}\,.$$

$$V_{1\to 1}[u] \;=\; \int\; dPS\, \Gamma(1\to 2)\;\; u\, \frac{\delta}{\delta\, u}.$$

$$V_{2\to 1}[u] \;=\; \int\; dPS\;\Gamma(2\to 1)\;\; u\, \frac{\delta}{\delta\, u}\, \frac{\delta}{\delta\, u}\,.$$

$$V_{2\to 2}[u] \;=\; \int\; dPS\;\Gamma(2\to 1)\;\; u\, u\, \frac{\delta}{\delta\, u}\, \frac{\delta}{\delta\, u}\,.$$

$$\frac{\partial\, \gamma_n}{\bar{\alpha}_s\, \partial\, Y} \;=\; \hat{K}^T \;\left[\, \gamma_n \;-\; \gamma_{n+1} \,\right] + \hat{\kappa}^T\, \gamma_{n-1}$$

$$\frac{\partial\, \rho_n^p}{\bar{\alpha}_s\, \partial\, Y} \;=\; \hat{K} \;\left[\, \rho_n^p \;+\; \rho_{n-1}^p \,\right] - \hat{\kappa}\, \rho_{n+1}^p$$

$$\frac{\partial\, \rho_n^t}{\bar{\alpha}_s\, \partial\, Y} \;=\; \hat{K} \;\left[\, \rho_n^t \;+\; \rho_{n-1}^t \,\right] - \hat{\kappa}\, \rho_{n+1}^t$$

$\Gamma\,(\,2\,\rightarrow\,1\,)$

$$\frac{\partial\,\rho_1^t}{\partial\,Y}\;\sim\;\Gamma\;(\,2\;\rightarrow\;1\,)\;\;\rho_2^t$$

$$\frac{\partial\,\gamma_1}{\bar{\alpha}_s\,\partial\,Y}\;=\;\int\,\Gamma(1\;\rightarrow\;2)\;\;[\,\gamma_1\;-\;\gamma_2\,]$$

$$\gamma_1\,(x,y)\;=\;\int\,\sigma_{BA}(x,y;\;\bar{x},\bar{y})\;\;\rho_1^t(\bar{x},\bar{y})\,d^2\bar{x}\,d^2\bar{y}$$

$$\gamma_2\,(x_1,y_1;\;x_2,y_2)\;=\;\int\,\sigma_{BA}(x_1,y_1;\;\bar{x}_1,\bar{y}_1)\,\sigma_{BA}(x_2,y_2;\;\bar{x}_2,\bar{y}_2)$$

$$\times\,\rho_2^t(\bar{x}_1,\bar{y}_1;\;\bar{x}_2,\bar{y}_2)\,d^2\bar{x}_1\,d^2\bar{y}_1\,d^2\bar{x}_2\,d^2\,\bar{y}_2$$

$$\Gamma_{2\rightarrow1}\,(1+2\rightarrow x,y)\;=$$

$$\frac{2N_c^2}{\alpha_s^2}\,\Delta_x\,\Delta_y\,\int_{1'\,2'}\,\Gamma_{1\rightarrow2}\,\left(x,y\rightarrow1'+2'\right)\;\sigma_{BA}\,\left(1;1'\right)\;\;\sigma_{BA}\,\left(2;2'\right)$$

$\Delta_x\,\Delta_y\;\int_{1'\,2'}$ can be worked out, down to the computer ready expression

Glauber rescattering and QCD Functional

Motivation: Glauber rescatterings are not included in Mueller's functional and in the BKe. No N_c or α_s suppression.

Physical process: $1 \quad \longrightarrow \quad n$-Pomeron vertex (local in rapidity)

Interpretation of the Glauber formula: one dipole splits to infinite number of dipoles of the same size. The number of dipoles is Poisson distributed.

The idea: $u \quad \longrightarrow \quad e^{\,u\,-\,1}$

$$\mathcal{V}(r;\,[u]) \;=$$

$$\bar{\alpha}_s \left(-\omega(r)\, e^{u(r)-1} + \int \frac{r^2\, d^2 r'}{2\,\pi\, r'^2 (\vec{r}-\vec{r}')^2}\, e^{u(r')-1+u(\vec{r}-\vec{r}')-1} \right) \frac{\delta}{\delta u(r)}$$

$$-\,\frac{\partial\, Z}{\partial\, y} \;=\; \int\, d^2\, r'\;\; \mathcal{V}(r';\,[u])\;\; Z\,.$$

M. Lublinsky

$$\frac{\partial\, N_A\,(Y, r)}{\bar{\alpha}_s\, \partial\, Y} \;=\; [1 \,-\, N_A(Y,\, r)] \times$$

$$Ker \,\otimes\, [\, 2\, N_A(Y,\, r') \,-\, N_A(Y,\, r) - \, N_A(Y,\, r')\, N_A(Y,\, \vec{r} \,-\, \vec{r}')\,]$$