REV.	DESCRIPTION	DRAWN	DATE
		APPD.	DATE

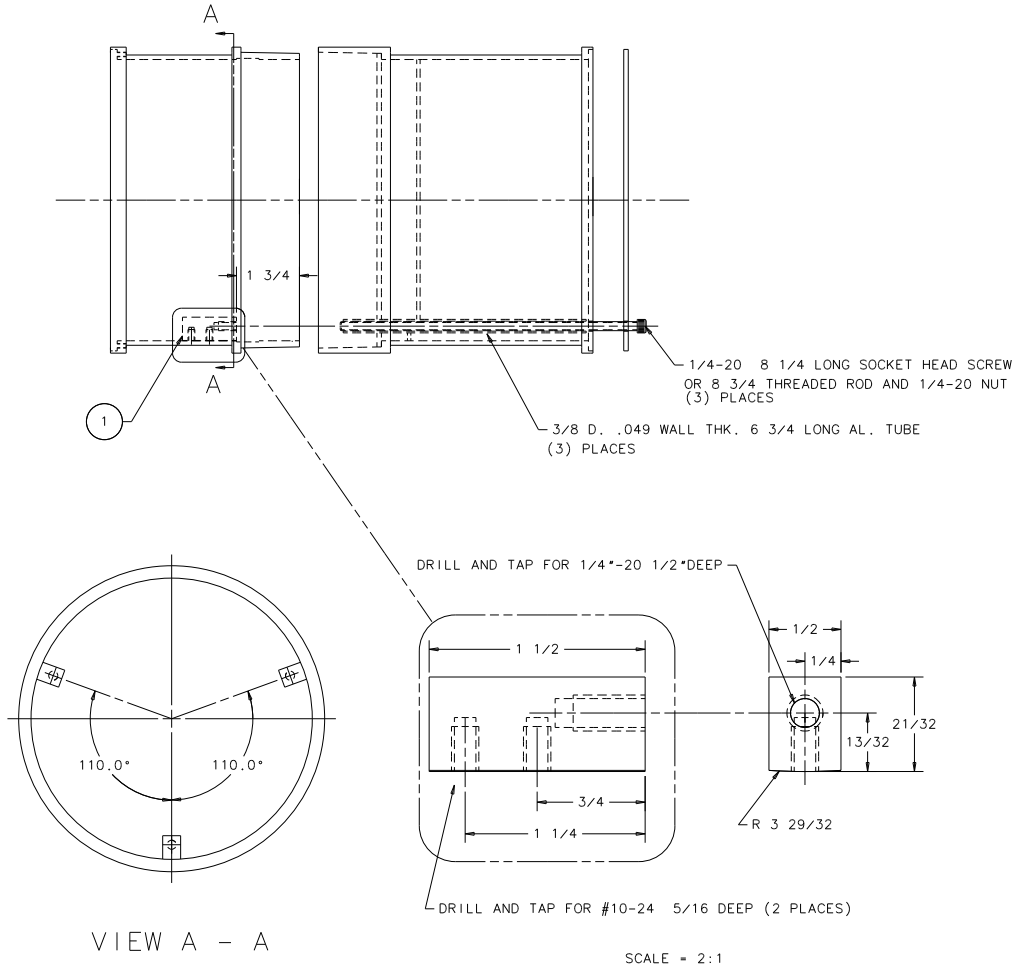

VIEW A - A

SCALE = 2:1

1		LOCK	3
ITEM	PART NO.	DESCRIPTION OR SIZE	QTY.

PARTS LIST

UNLESS OTHERWISE SPECIFIED			ORIGINATOR	N. OLIVEIRA	
FRACTION		ANGLE	DRAWN	N. OLIVEIRA	07/00
± 1/256	±	± .1	CHECKED		
1. BREAK ALL SHARP EDGES 1/64 MAX.			APPROVED		
2. DO NOT SCALE DRAWING.			USED ON		
3. DIMENSIONS BASED UPON ANSI Y14.5M-1982					
4. MAX. ALL MACH. SURFACES 125			MATERIAL	6061 ALUMINUM BAR	

FERMI NATIONAL ACCELERATOR LABORATORY
UNITED STATES DEPARTMENT OF ENERGY

FPD CARTRIDGE LOCK

SCALE	FILMED	DRAWING NUMBER	REV.
1:2		7	

cart_case_lock.dwg
C size

CADFILE:	CREATED WITH I-DEAS_VI	USER NAME: NEWTONOL