| REV. | DESCRIPTION | DRAWN | DATE |
|---|---|---|---|
| | | APPD. | DATE |

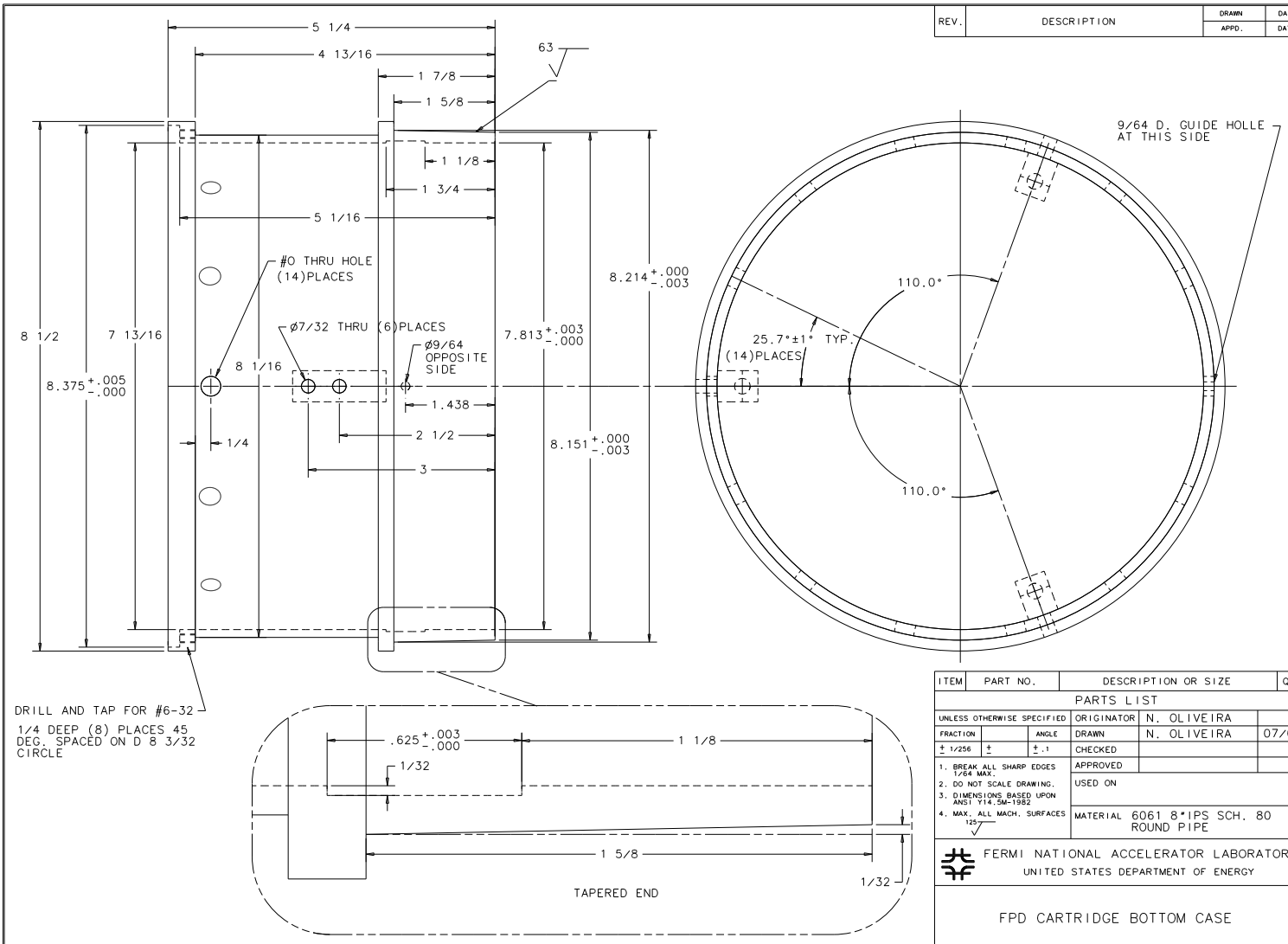





SCALE 5:1

cart_cil1.dwg
C size

| ITEM | PART NO. | DESCRIPTION OR SIZE | QTY. |
|---|---|---|---|
| | | PARTS LIST | |

| | | | |
|---|---|---|---|
| UNLESS OTHERWISE SPECIFIED | | ORIGINATOR | N. OLIVEIRA |
| FRACTION | ANGLE | DRAWN | N. OLIVEIRA 07/00 |
| ± 1/256 | ± ±.1 | CHECKED | |
| 1. BREAK ALL SHARP EDGES 1/64 MAX. | | APPROVED | |
| 2. DO NOT SCALE DRAWING. | | USED ON | |
| 3. DIMENSIONS BASED UPON ANSI Y14.5M-1982 | | | |
| 4. MAX. ALL MACH. SURFACES 125 | | MATERIAL | 6061 8"IPS SCH. 80 ROUND PIPE |

FERMI NATIONAL ACCELERATOR LABORATORY
UNITED STATES DEPARTMENT OF ENERGY

FPD CARTRIDGE BOTTOM CASE

| SCALE | FILMED | DRAWING NUMBER | REV. |
|---|---|---|---|
| 1:1 | | 6 | |

| CADFILE: | CREATED WITH I-DEAS_VI | USER NAME: NEWTONOL |
|---|---|---|