REV.	DESCRIPTION	DRAWN	DATE
		APPD.	DATE

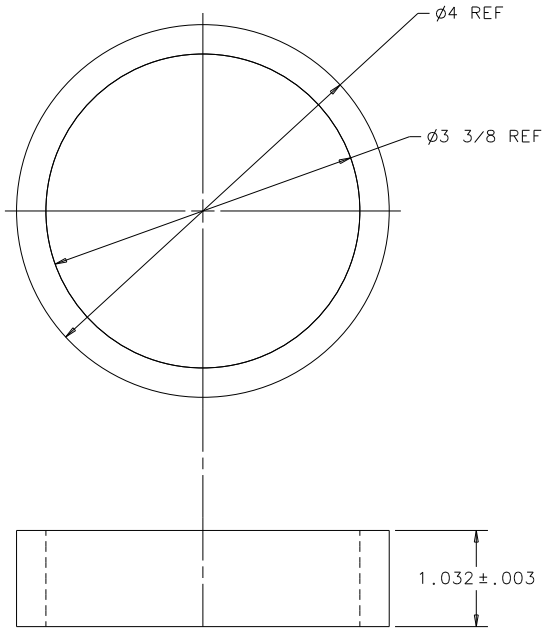

ITEM	PART NO.	DESCRIPTION OR SIZE	QTY.

PARTS LIST

UNLESS OTHERWISE SPECIFIED	ORIGINATOR	N.OLIVEIRA	
FRACTION ± 1/64 ± ±	DRAWN	N. OLIVEIRA	8/00
	CHECKED		
1. BREAK ALL SHARP EDGES 1/64 MAX.	APPROVED		
2. DO NOT SCALE DRAWING.	USED ON		
3. DIMENSIONS BASED UPON ANSI Y14.5M-1982.			
4. MAX. ALL MACH. SURFACES 63 √	MATERIAL 6061 3 1/2 IPS SCH.80 ROUND PIPE		

FERMI NATIONAL ACCELERATOR LABORATORY
UNITED STATES DEPARTMENT OF ENERGY

FPD DETECTOR ASSEMBLY SPACER

SCALE	FILMED	DRAWING NUMBER	REV.
1:1			

cart_detector_spacer.dwg
B size

CADFILE:	CREATED WITH I-DEAS_VI	USER NAME: NEWTONOL