REV.	DESCRIPTION	DRAWN	DATE
		APPD.	DATE

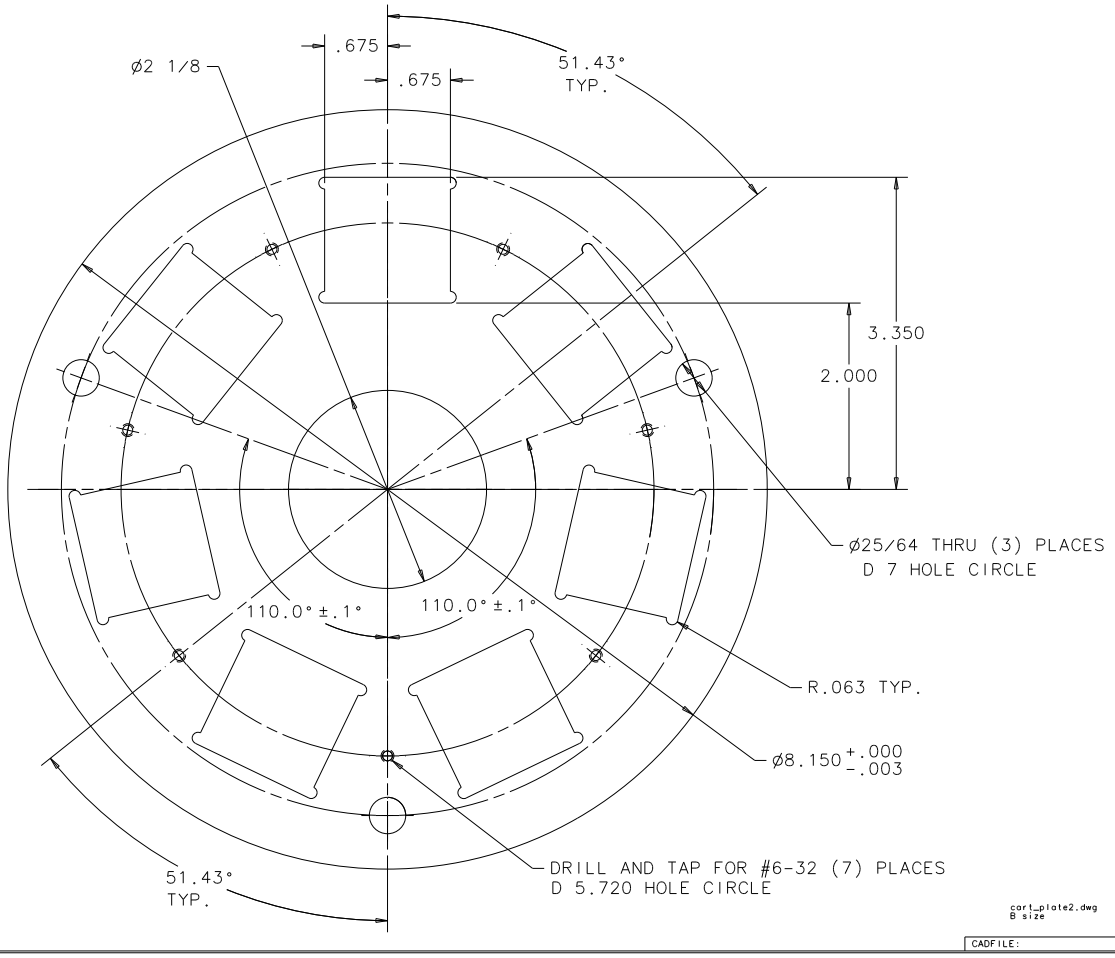

ITEM	PART NO.	DESCRIPTION OR SIZE	QTY.
PARTS LIST			

UNLESS OTHERWISE SPECIFIED			ORIGINATOR	N. OLIVEIRA	
FRACTION	DECIMAL	ANGLE	DRAWN	N. OLIVEIRA	07/00
± 1/256	± .003	± .05	CHECKED		
			APPROVED		

1. BREAK ALL SHARP EDGES 1/64 MAX.
2. DO NOT SCALE DRAWING.
3. DIMENSIONS BASED UPON ANSI Y14.5M-1982.
4. MAX. ALL MACH. SURFACES 63 √

USED ON

MATERIAL
6061 ALUMINUM SHEET 1/8"THK.

FERMI NATIONAL ACCELERATOR LABORATORY
UNITED STATES DEPARTMENT OF ENERGY

FPD CARTRIDGE PLATE 2

SCALE	FILMED	DRAWING NUMBER	REV.
1:1		10	

cart_plate2.dwg
B size

CADFILE: CREATED WITH I-DEAS_VI USER NAME: NEWTONOL