REV.	DESCRIPTION	DRAWN	DATE
		APPD.	DATE

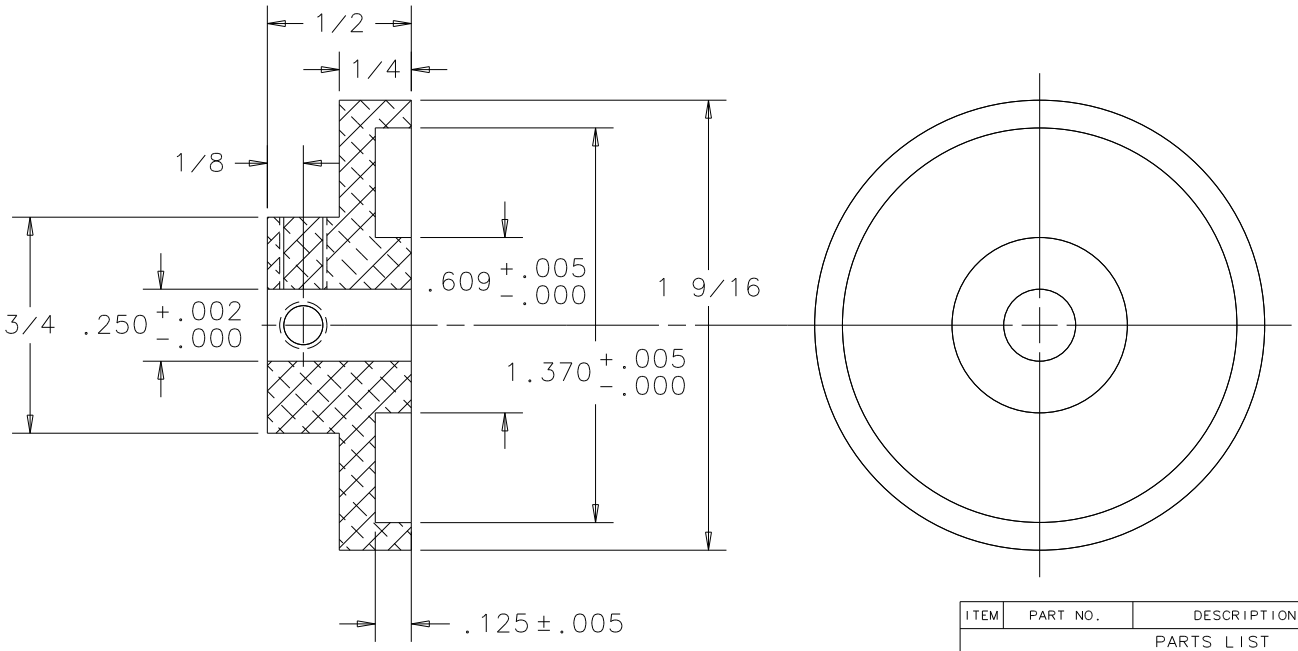

MATERIAL:
"BERG MANUFACTURE" GEAR BLANK
STOCK # PB66A-1.563
(2024T4 ALUMINUM ANODIZED)

NOTE:
2 X #8-32 Set Screws
90 Deg. Apart

ITEM	PART NO.	DESCRIPTION OR SIZE	QTY.
PARTS LIST			

UNLESS OTHERWISE SPECIFIED	ORIGINATOR	N. OLIVEIRA	
FRACTION	DRAWN	N. OLIVEIRA	10/99
± 1/64 ± ±	CHECKED		
1. BREAK ALL SHARP EDGES 1/64 MAX.	APPROVED		
2. DO NOT SCALE DRAWING. 3. DIMENSIONS BASED UPON ANSI Y14.5M-1982	USED ON		
4. MAX. ALL MACH. SURFACES 125 √	MATERIAL		

FERMI NATIONAL ACCELERATOR LABORATORY
UNITED STATES DEPARTMENT OF ENERGY

ENCODER DISK

SCALE	FILMED	DRAWING NUMBER	REV.
2:1			

encoder1.dwg
A size

CADFILE:	CREATED WITH I-DEAS_VI	USER NAME: NEWTONOL