REV.	DESCRIPTION	DRAWN	DATE
		APPD.	DATE

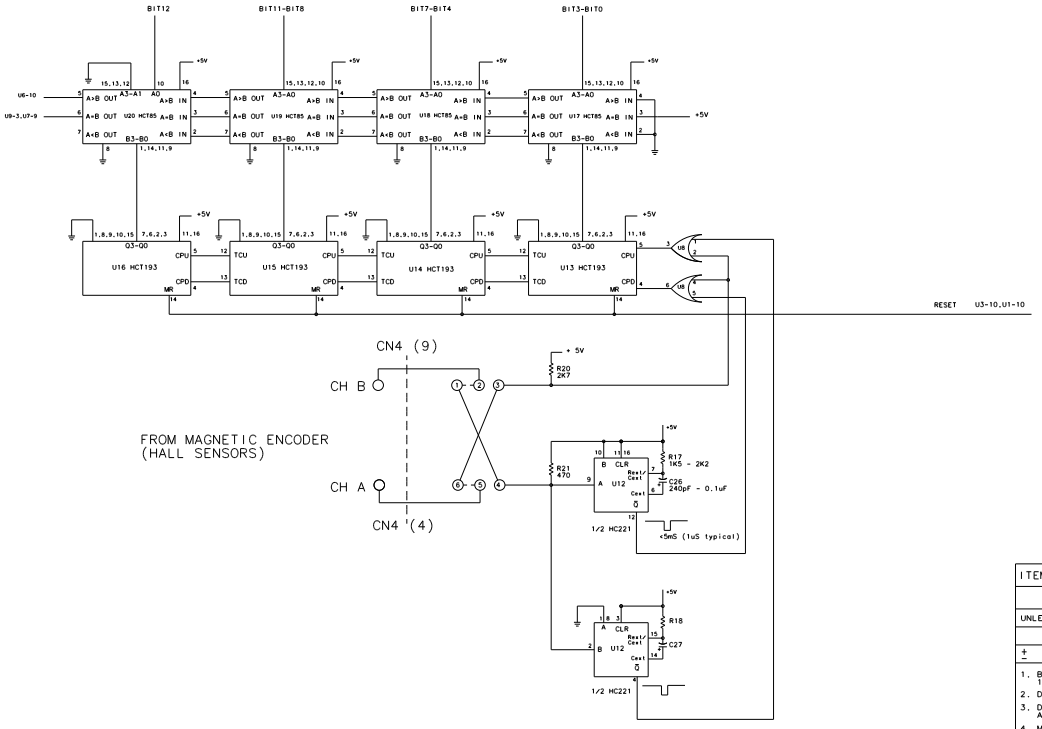

Note: "As is" version
R21 changed to 470

ITEM	PART NO.	DESCRIPTION OR SIZE	QTY.
PARTS LIST			

UNLESS OTHERWISE SPECIFIED	ORIGINATOR	N. OLIVEIRA
	DRAWN	N. OLIVEIRA 03/01
± ± ±	CHECKED	
1. BREAK ALL SHARP EDGES 1/64 MAX.	APPROVED	
2. DO NOT SCALE DRAWING.	USED ON	
3. DIMENSIONS BASED UPON ANSI Y14.5M-1982		
4. MAX. ALL MACH. SURFACES	MATERIAL	

FERMI NATIONAL ACCELERATOR LABORATORY
UNITED STATES DEPARTMENT OF ENERGY

DECODER/COUNTER

inter_decoder_counter.dwg
C size

SCALE	FILMED	DRAWING NUMBER	REV.

CADFILE:	CREATED WITH I-DEAS_VI	USER NAME: NEWTONOL