REV.	DESCRIPTION	DRAWN	DATE
		APPD.	DATE

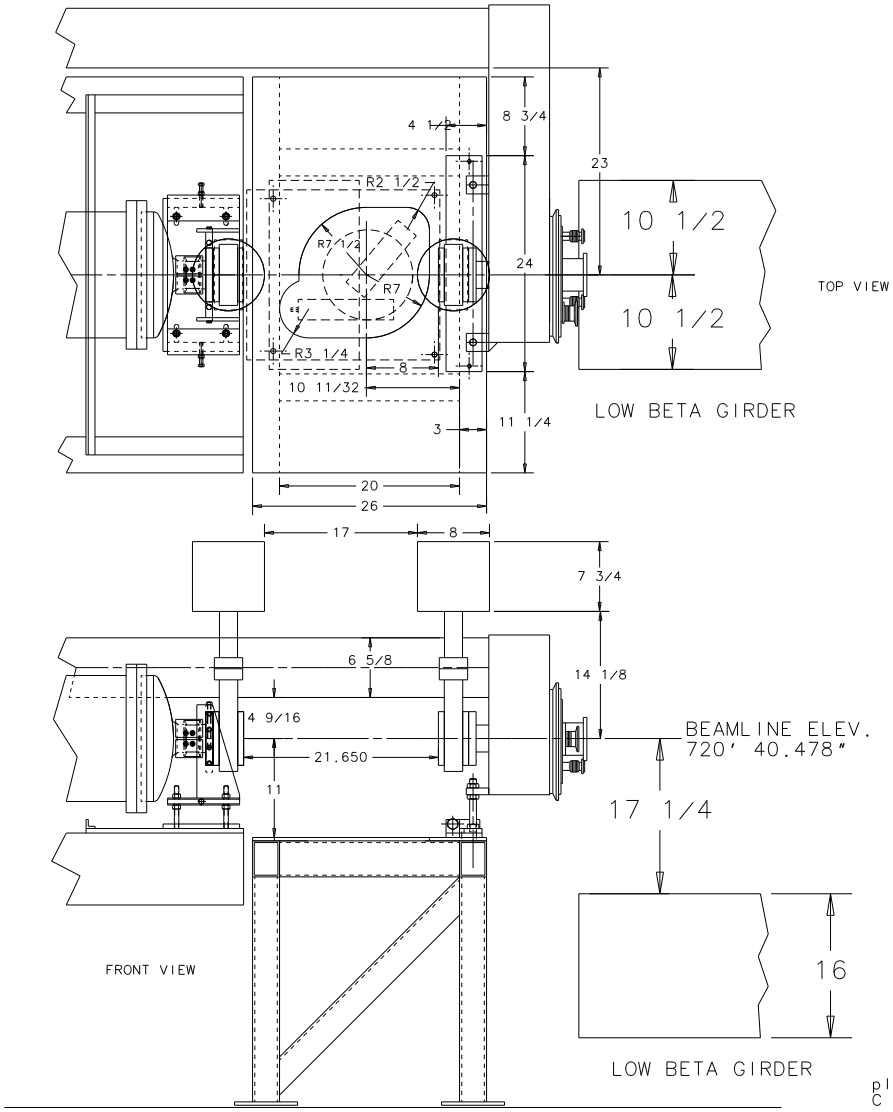

place3.dwg
C size

ITEM	PART NO.	DESCRIPTION OR SIZE	QTY.
PARTS LIST			

UNLESS OTHERWISE SPECIFIED	ORIGINATOR	N. OLIVEIRA	
	DRAWN	N. OLIVEIRA	04/00
± ± ±	CHECKED		
1. BREAK ALL SHARP EDGES 1/64 MAX.	APPROVED		
2. DO NOT SCALE DRAWING. 3. DIMENSIONS BASED UPON ANSI Y14.5M-1982	USED ON		
4. MAX. ALL MACH. SURFACES √	MATERIAL		

FERMI NATIONAL ACCELERATOR LABORATORY
UNITED STATES DEPARTMENT OF ENERGY

POT PLACE AT C49 DOWNSTREAM

SCALE	FILMED	DRAWING NUMBER	REV.
1:8		DRAFT	

CADFILE:	CREATED WITH I-DEAS_VI	USER NAME: NEWTONOL