REV.	DESCRIPTION	DRAWN	DATE
		APPD.	DATE

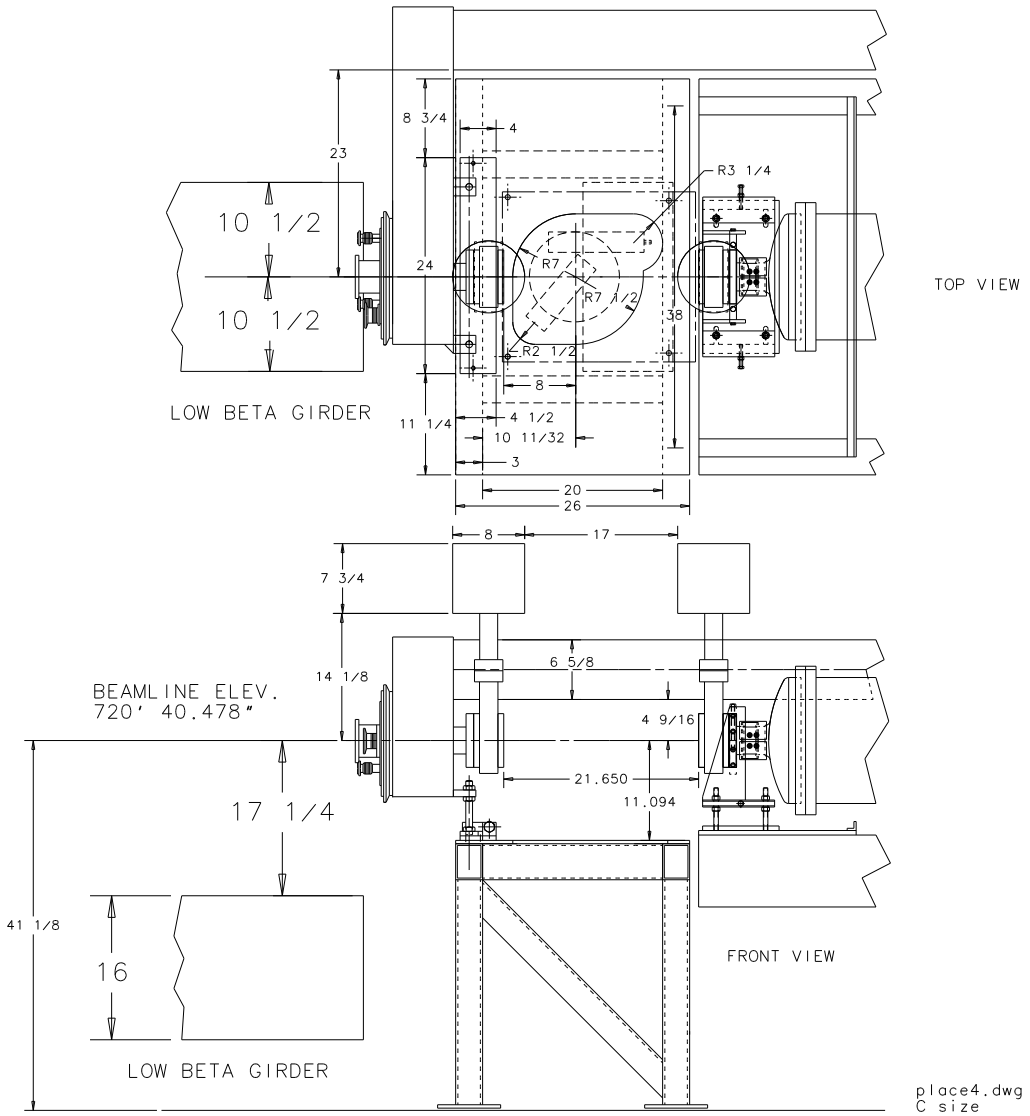

ITEM	PART NO.	DESCRIPTION OR SIZE	QTY.
PARTS LIST			

UNLESS OTHERWISE SPECIFIED	ORIGINATOR	N. OLIVEIRA
	DRAWN	N. OLIVEIRA 04/00
± ± ±	CHECKED	
1. BREAK ALL SHARP EDGES 1/64 MAX.	APPROVED	
2. DO NOT SCALE DRAWING.	USED ON	
3. DIMENSIONS BASED UPON ANSI Y14.5M-1982		
4. MAX. ALL MACH. SURFACES	MATERIAL	

FERMI NATIONAL ACCELERATOR LABORATORY
UNITED STATES DEPARTMENT OF ENERGY

POT PLACE AT D11 UPSTREAM

SCALE	FILMED	DRAWING NUMBER	REV.
1:8		DRAFT	

place4.dwg
C size

CADFILE:

CREATED WITH I-DEAS_VI

USER NAME: NEWTONOL