Revision	Description	Date

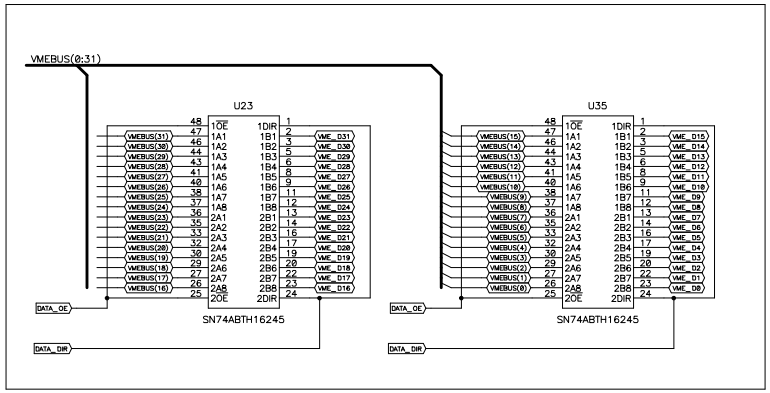

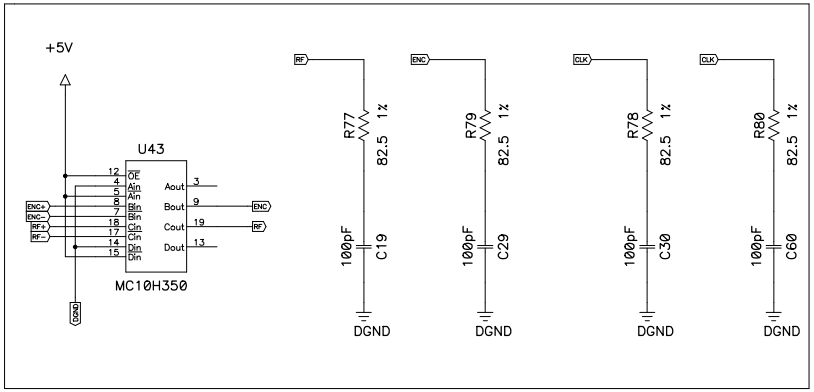

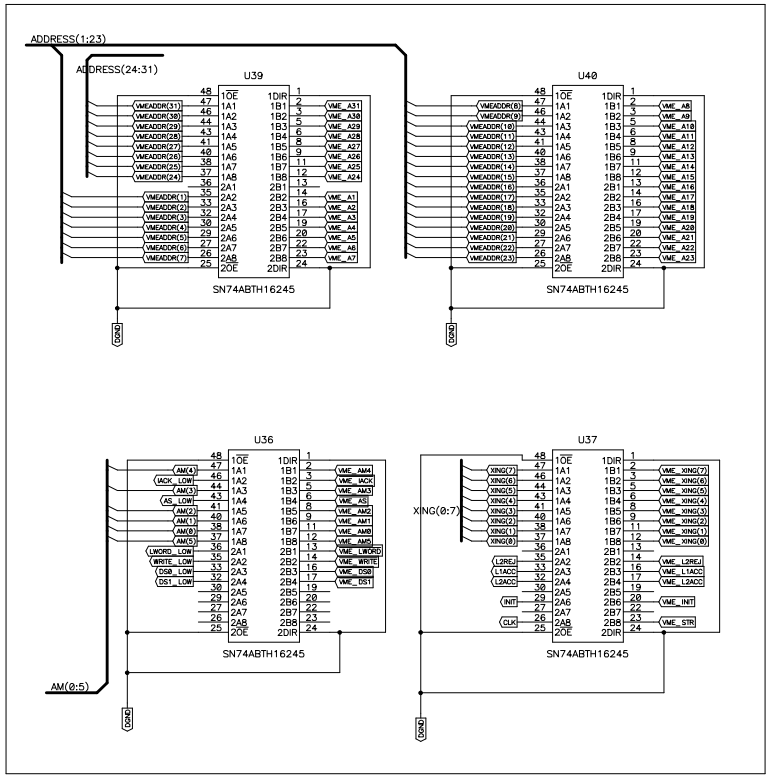

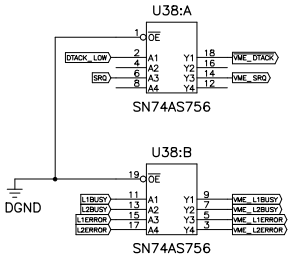

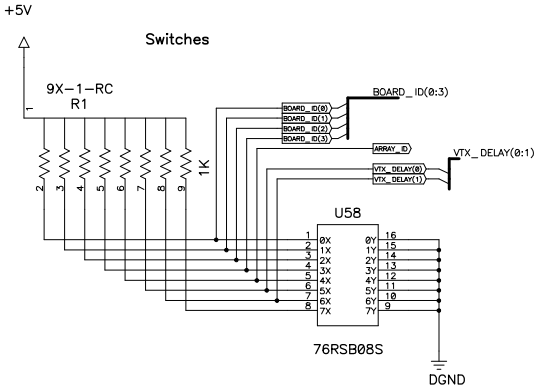

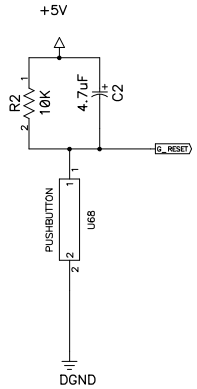

Title
L0 TDC DRIVER

Size	Drawn by C. Miao	Revision
C	Checked by	4
Date 5-18-00		
Filename L0TDC_1.SCH	Sheet 17 of 21	

Notes All discretes are 1206 surface mount type.
Resistors R35, R36, R37, R40, and R41 should be 1/8 W
1% tolerance resistors.