Revision	Description	Date

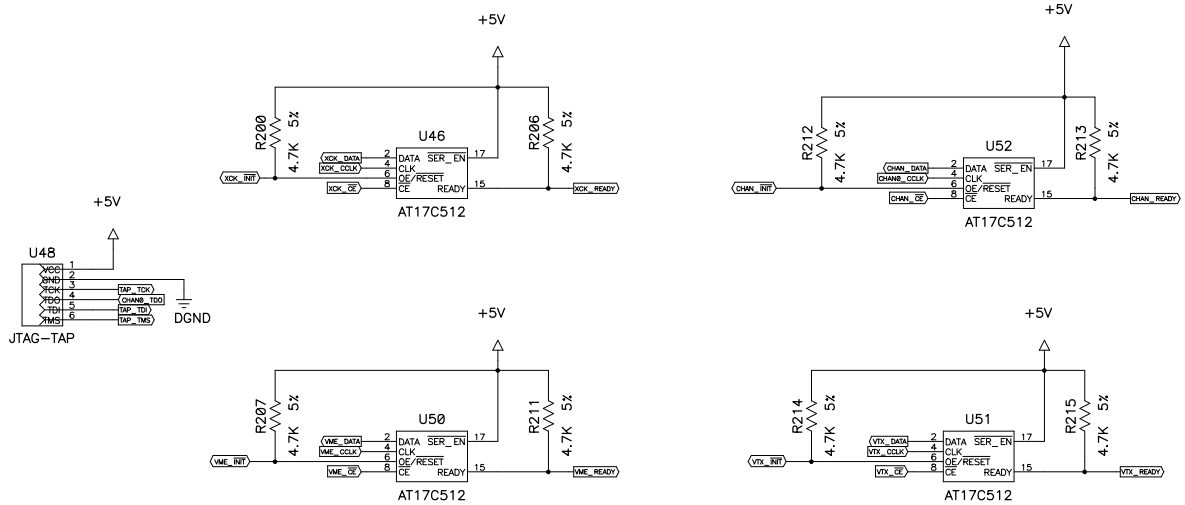

Title
L0 TDC JTAG & CONFIGURATION

Size C	Drawn by C. Miao	Revision 4
	Checked by	
Date 5-18-00		
Filename L0TDC_1.SCH	Sheet 16 of 21	

Notes All discretes are 1206 surface mount type.
Resistors R35, R36, R37, R40, and R41 should be 1/8 W
1% tolerance resistors.