Revision	Description	Date

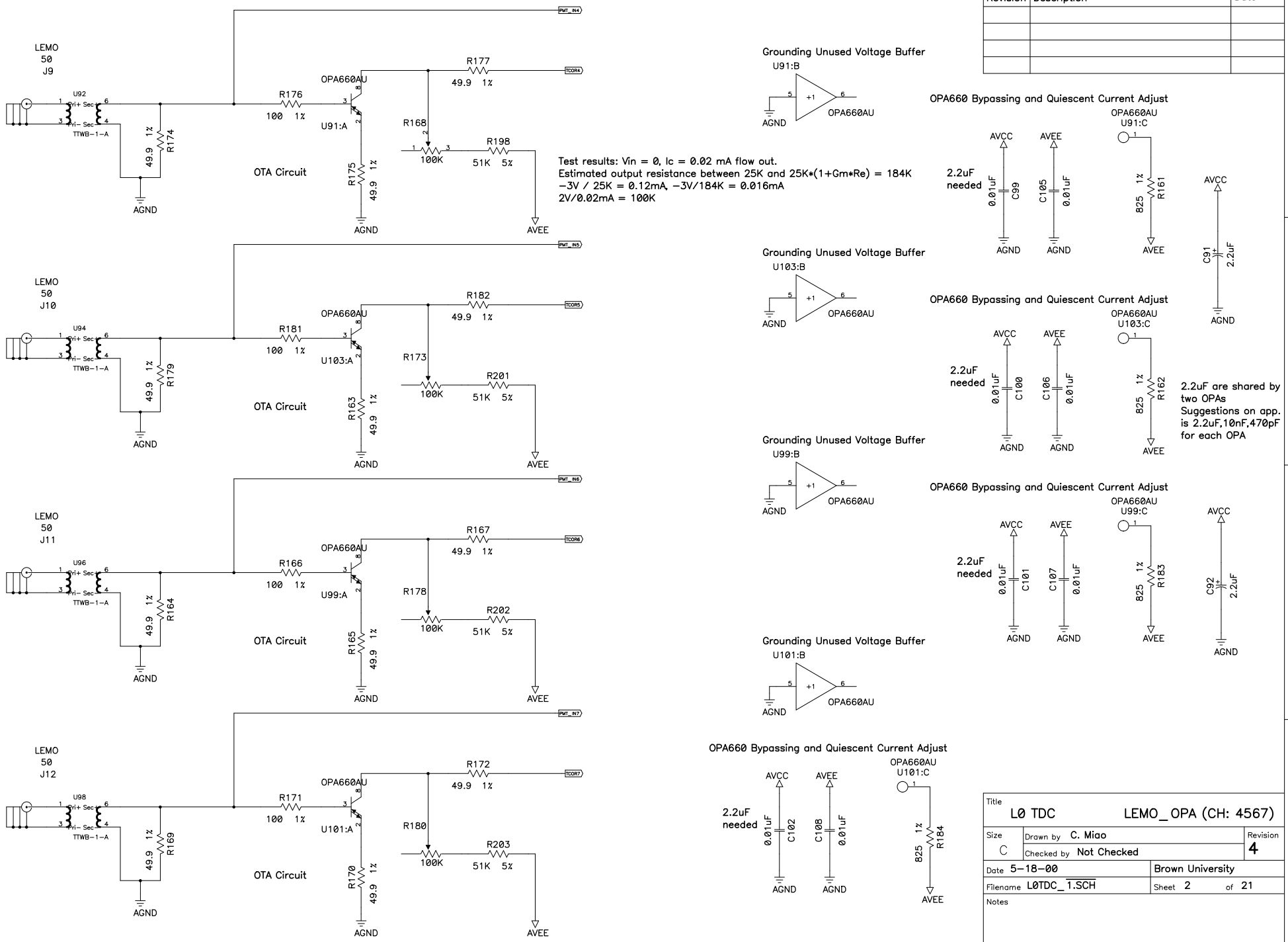

Title	L0 TDC	LEMO_ OPA (CH: 4567)
Size C	Drawn by C. Miao	Revision 4
	Checked by Not Checked	
Date 5-18-00		Brown University
Filename L0TDC_1.SCH		Sheet 2 of 21
Notes		