Revision	Description	Date
1	Converted from P-CAD database, removed reference capacitor	6-15-99
2	Removed output buffer, cal. circuitry. Fixed THRESH V divider, current sources. Replaced MC2N2917 with MAT04.	6-22-99
3	Added zener biasing circuit, Revised current source for -15V	8-3-99
4	Misc. changes	11/18/99

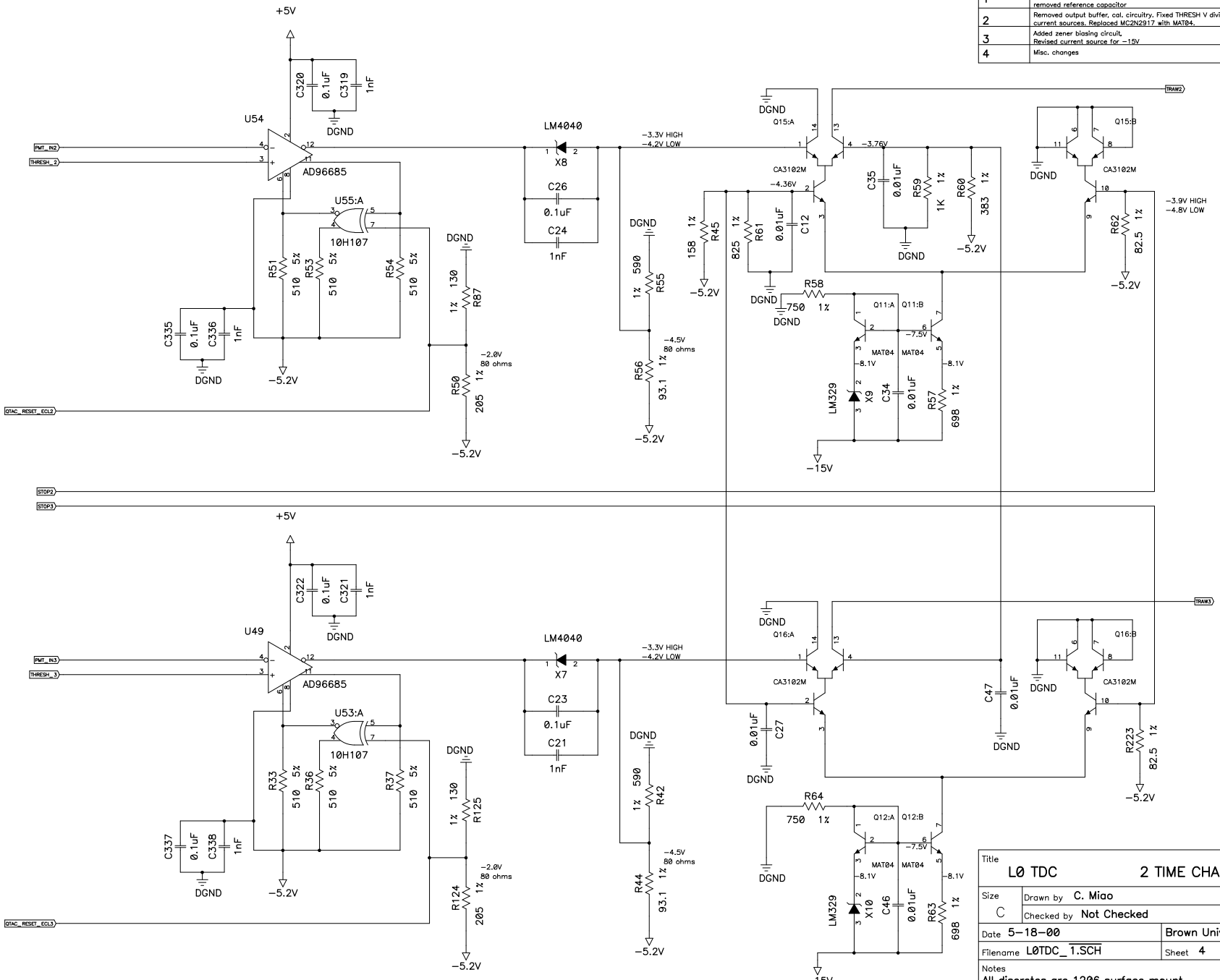

Title
L0 TDC 2 TIME CHANNELS: 23

Size C
Drawn by C. Miao
Checked by Not Checked
Revision 4

Date 5-18-00
Brown University

Filename L0TDC_1.SCH
Sheet 4 of 21

Notes
All discretes are 1206 surface mount
All resistors are 1/8 W