Revision	Description	Date
1	Converted from P-CAD database, removed reference capacitor	6-15-99
2	Removed output buffer, cal. circuitry. Fixed THRESH V divider, current sources. Replaced MC2N2917 with MAT04.	6-22-99
3	Added zener biasing circuit, Revised current source for -15V	8-3-99
4	Misc. changes	11/18/99

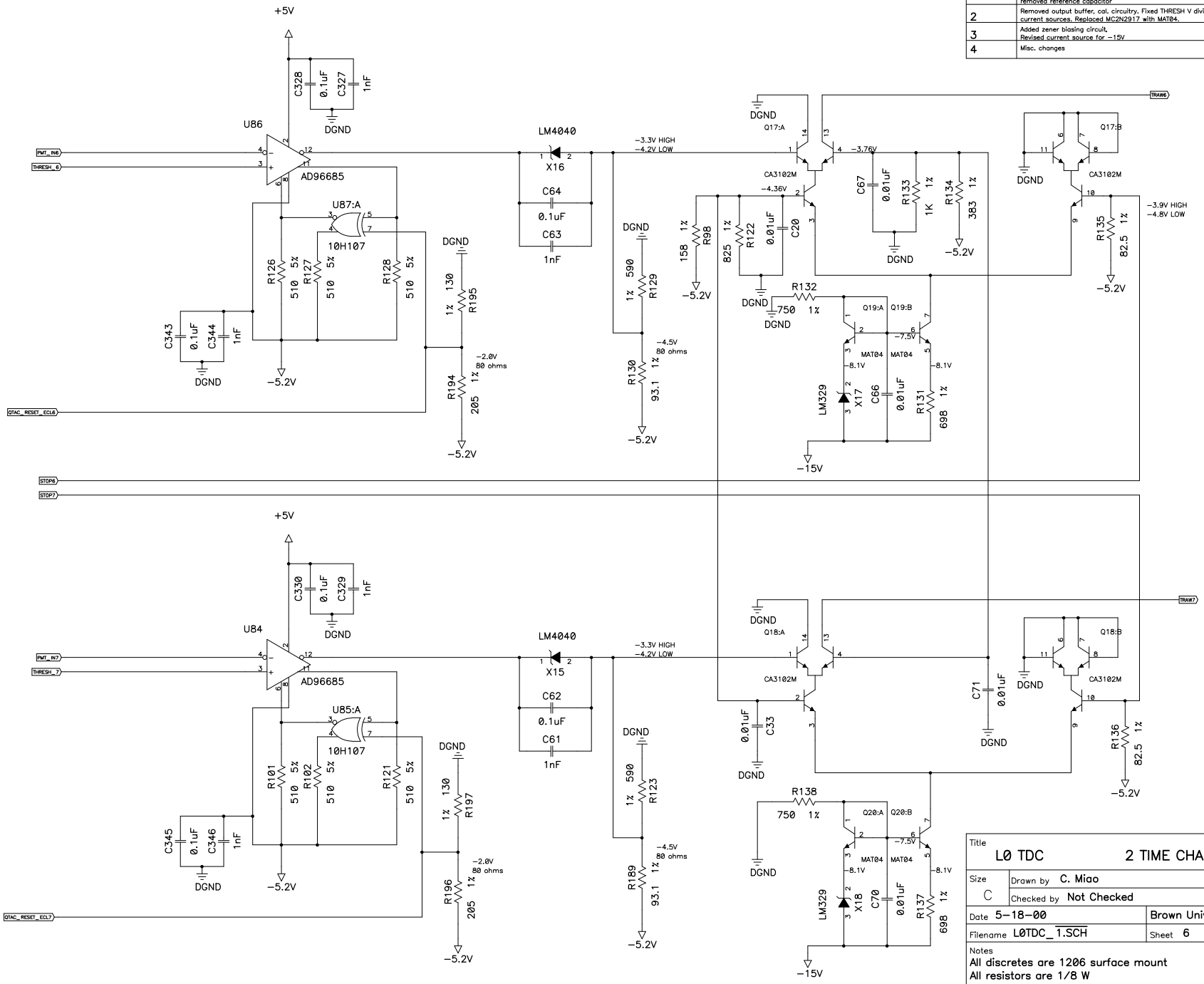

Title
L0 TDC — 2 TIME CHANNELS: 67

Size C	Drawn by C. Miao	Revision 4
	Checked by Not Checked	
Date 5-18-00	Brown University	
Filename L0TDC_1.SCH	Sheet 6 of 21	

Notes
All discretes are 1206 surface mount
All resistors are 1/8 W