REV.	DESCRIPTION	DRAWN	DATE
		APPD.	DATE

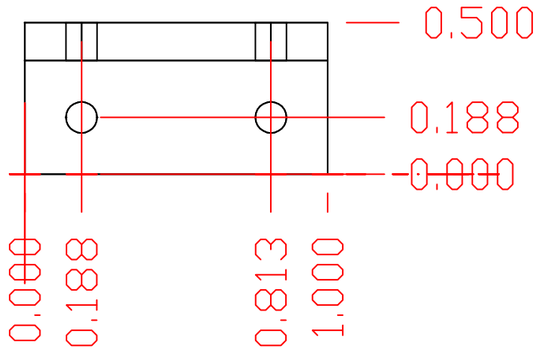

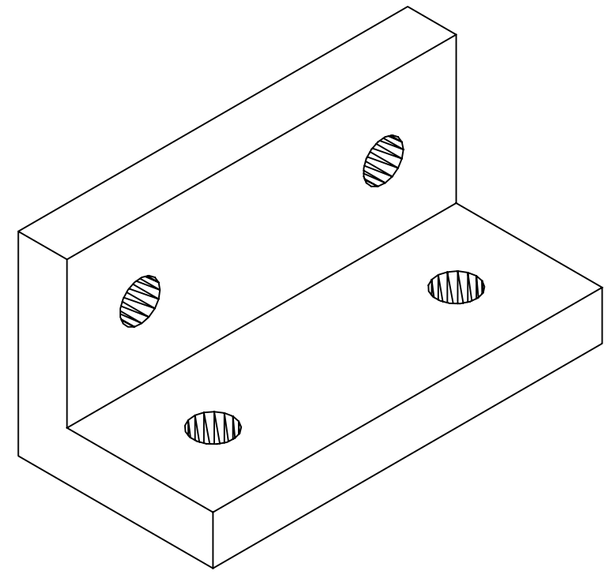

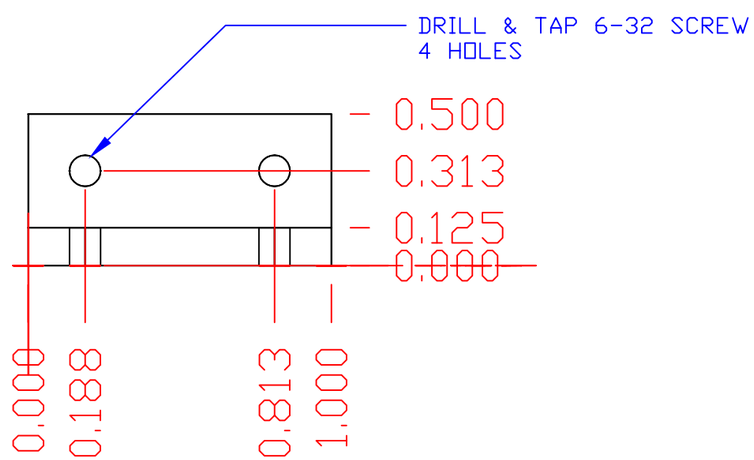

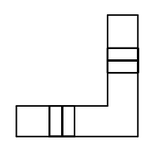

ITEM	PART NO.	DESCRIPTION OR SIZE	QTY.
PARTS LIST			

UNLESS OTHERWISE SPEC.			ORIGINATOR	D. L. HUFFMAN	9/12/89
FRACTIONS	DECIMALS	ANGLES	DRAWN		
			CHECKED		
			APPROVED		
			USED ON		
			MATERIAL- 6063-T6 ALUM. 1/8" SQR. ANGLE 1510-0500 FNAL STOCK		

FERMI NATIONAL ACCELERATOR LABORATORY
UNITED STATES DEPARTMENT OF ENERGY

D0 SYSTEM CALORIMETERY

PREAMP BOX AREA AC POWER PANEL BKT

SCALE	FILMED	DRAWING NUMBER	REV.
2:1		3740.412-MB-286092	