REV.	DESCRIPTION	DRAWN	DATE
		APPD.	DATE

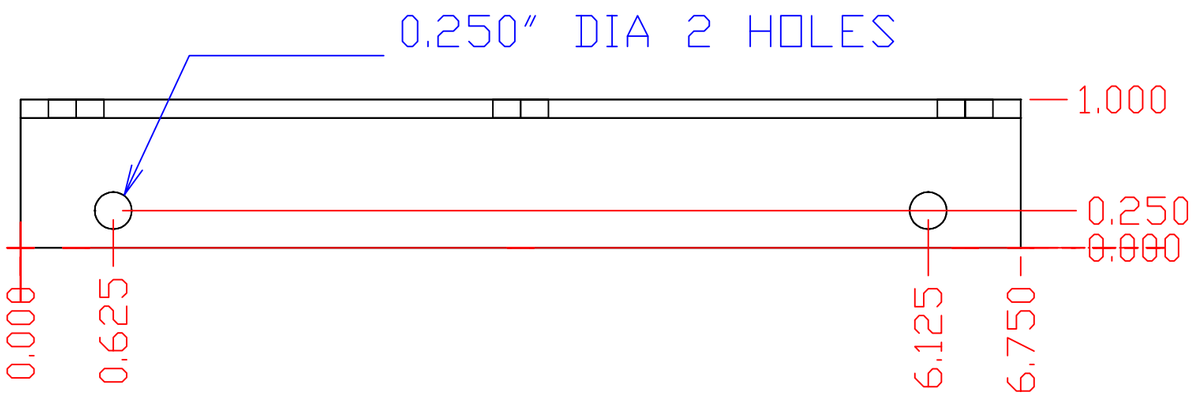

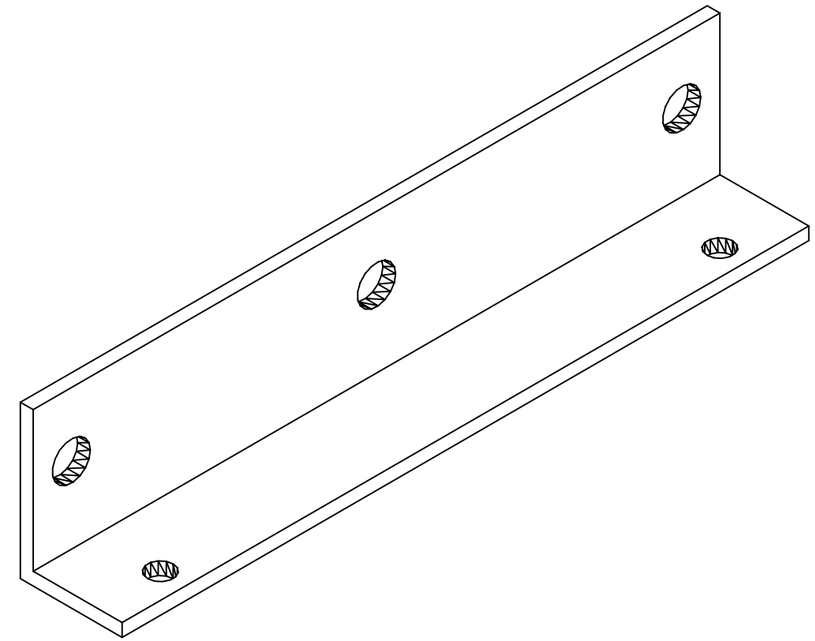

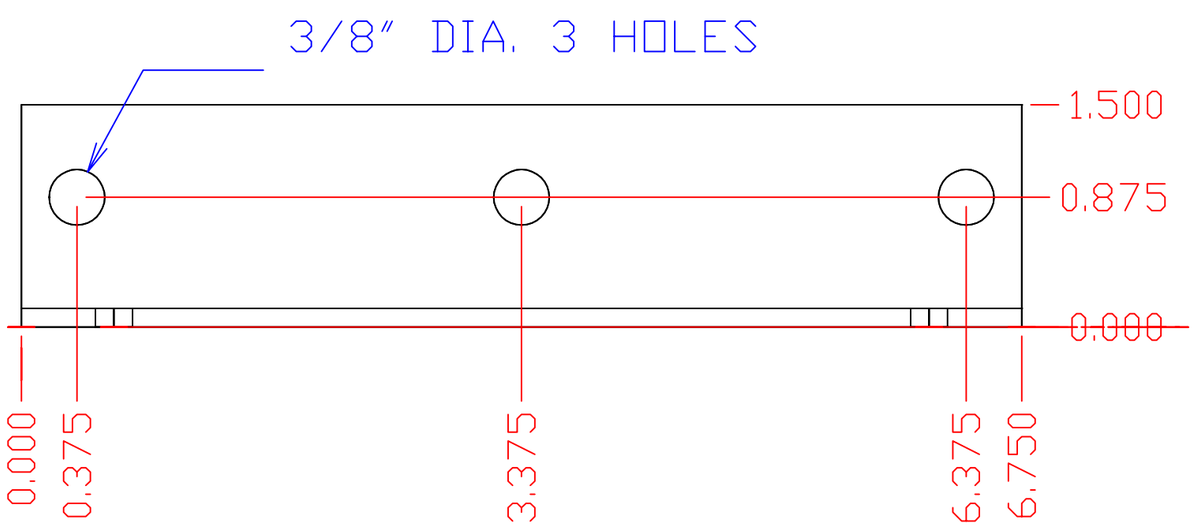

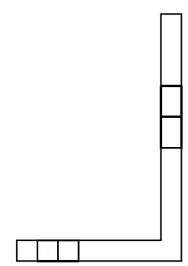

ITEM	PART NO.	DESCRIPTION OR SIZE	QTY.
		PARTS LIST	

UNLESS OTHERWISE SPEC.			ORIGINATOR	D. L. HUFFMAN	9/12/89
FRACTIONS	DECIMALS	ANGLES	DRAWN		
			CHECKED		
			APPROVED		
			USED ON		
			MATERIAL- FNAL STOCK #1510-0530 6063-T6 ALUM. 1 X 1.5" ANGLE		

FERMI NATIONAL ACCELERATOR LABORATORY
UNITED STATES DEPARTMENT OF ENERGY

DO SYSTEM CALORIMETERY
PREAMP BOX AREA AC POWER XFORMER BKT

SCALE	FILMED	DRAWING NUMBER	REV.
1:1		3740.412-MB-286094	