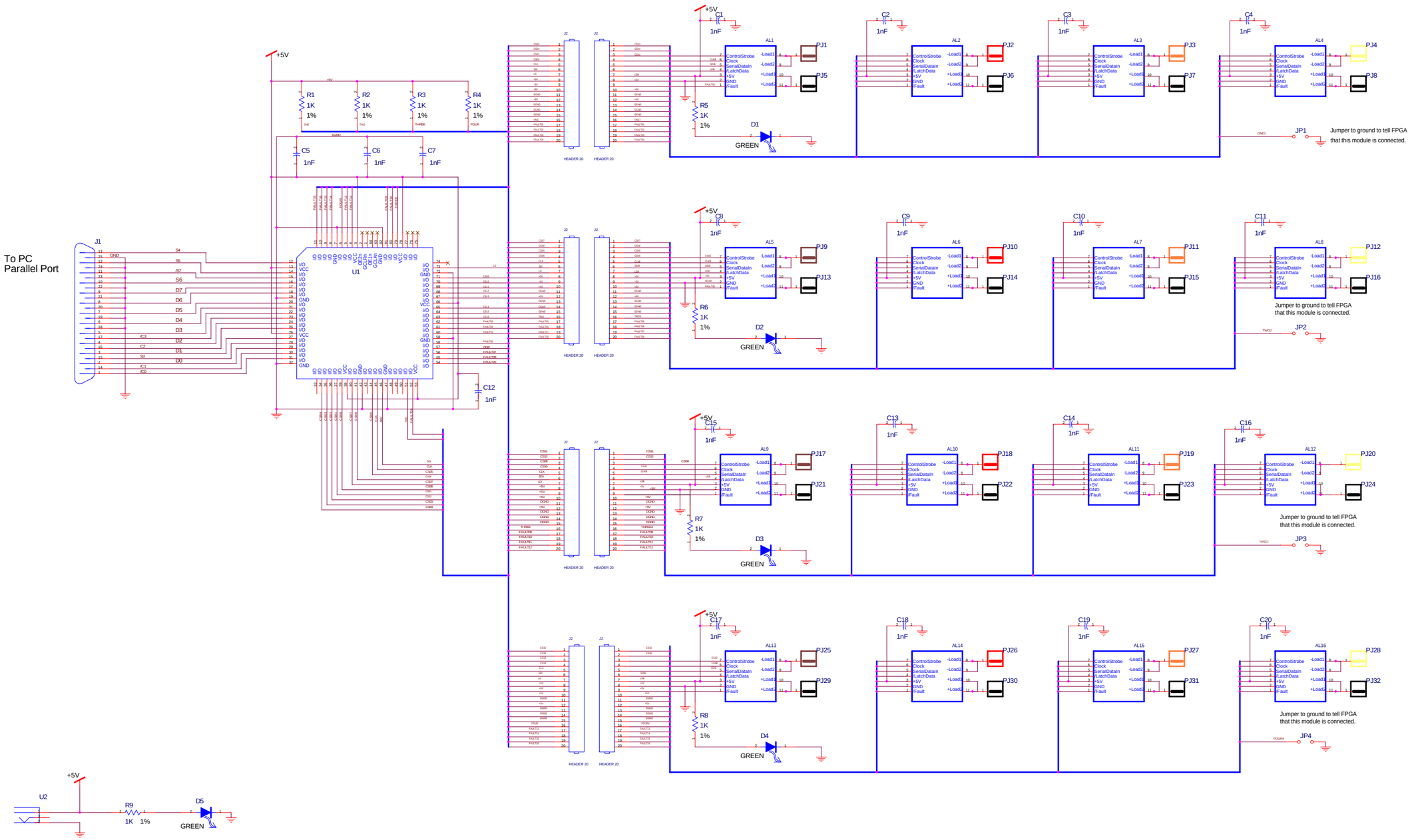

Title	BLS LOGIC BOARD
Size	
Number	3740.412-MD-286084
Rev.	A
Date	
Filename	
Sheet	1 of 1
	David L. Huffman