REV.	DESCRIPTION	DRAWN	DATE
		APPD.	DATE
A	CONVERTED TO AUTOCAD	A. KNUDSON	5/22/00

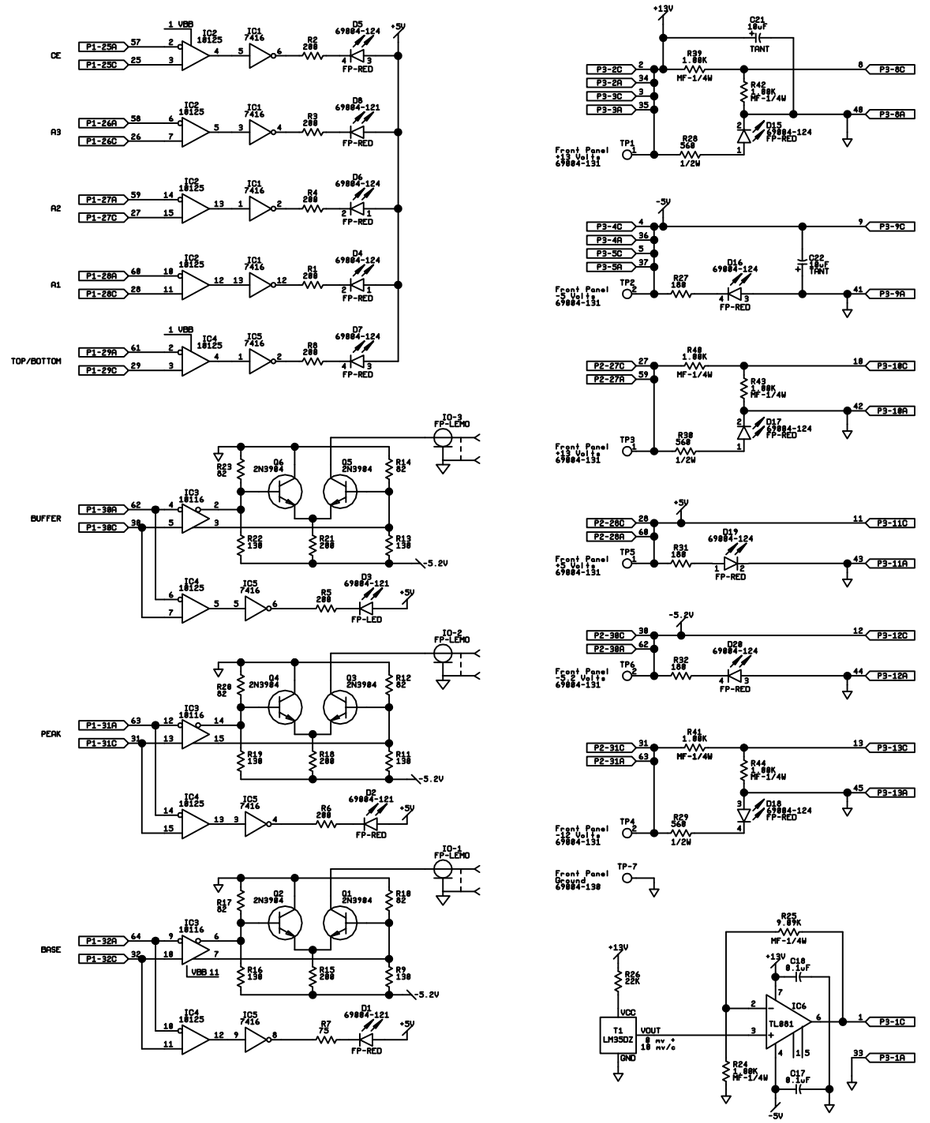

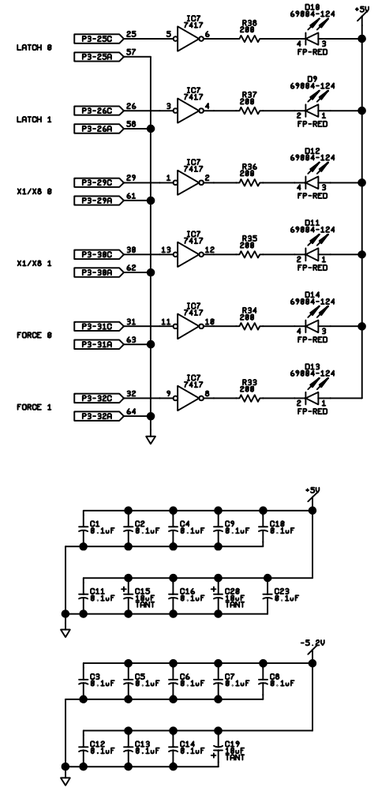

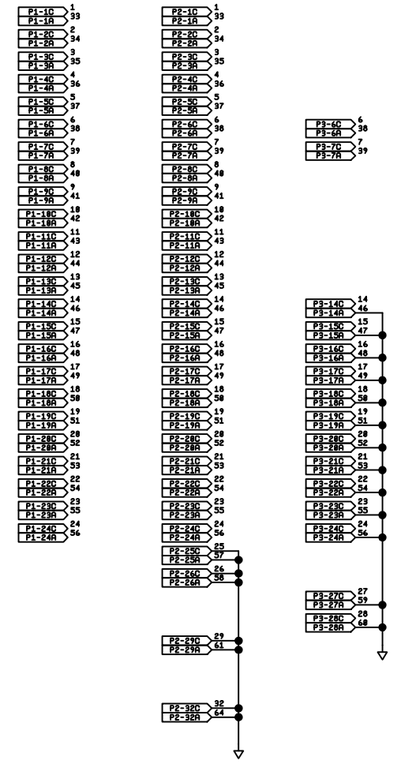

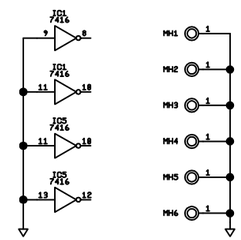

NOTES:

1. ALL RESISTORS ARE ALLEN-BRADLEY, 1/4 WATT, ±5 , HOT-MOLDED FIXED RESISTORS UNLESS OTHERWISE NOTED.
2. RESISTORS MARKED 1/2W ARE ALLEN-BRADLEY, 1/2 WATT, ±5 , HOT-MOLDED FIXED RESISTORS.
3. RESISTORS MARKED MF-1/4W ARE DALE, 1/4 WATT, ±1 , 100ppm/c, METAL FILM RESISTORS.
4. PARTS WITH DESIGNATORS MH1 THROUGH MH6 ARE FRONT PANEL MOUNTING HOLES. THESE HOLES ALLOW THE FRONT PANEL TO BE GROUNDED.

PRINTED CIRCUIT BOARD	
TITLE	DWG NO.
SCHEMATIC	ED-255874
ARTWORK	BD-255875
MASTER DWG	BD-255876
ASSEMBLY DWG	BD-255877
OUTLINE DWG	BD-255878
SOLDER MASK	BD-255879
SILKSCREEN	BD-255880
PARTS LIST	PL-255881

ITEM NO.	PART NO.	DESCRIPTION OR SIZE	QTY. REQ.
PARTS LIST			

UNLESS OTHERWISE SPECIFIED			ORIGINATOR	G. KRAFCZYK	8-3-89
FRACTIONS	DECIMALS	ANGLES	DRAWN	G. KRAFCZYK	8-3-89
+/-	+/-	+/-	CHECKED	G. KRAFCZYK	9-25-89
1. BREAK ALL SHARP EDGES 1/64 MAX. 2. DO NOT SCALE DRAWING. 3. DIMENSIONING IN ACCORD WITH ANSI Y14.5 STD S			APPROVED	G. KRAFCZYK	9-25-89
			USED ON		
MAX. ALL MACHINED SURFACE			MATERIAL		

SCIDESIGN Release 3.0

FERMI NATIONAL ACCELERATOR LABORATORY
UNITED STATES DEPARTMENT OF ENERGY

D0 CALORIMETER
BLS CRATE MONITOR
SCHEMATIC

SCALE	FILMED	DRAWING NUMBER	REV.
		3740.412-ED-255874	A