REV.	DESCRIPTION	DRAWN	DATE
		APPD.	DATE
A	CONVERTED TO AUTOCAD	A. KNUDSON	5/22/00

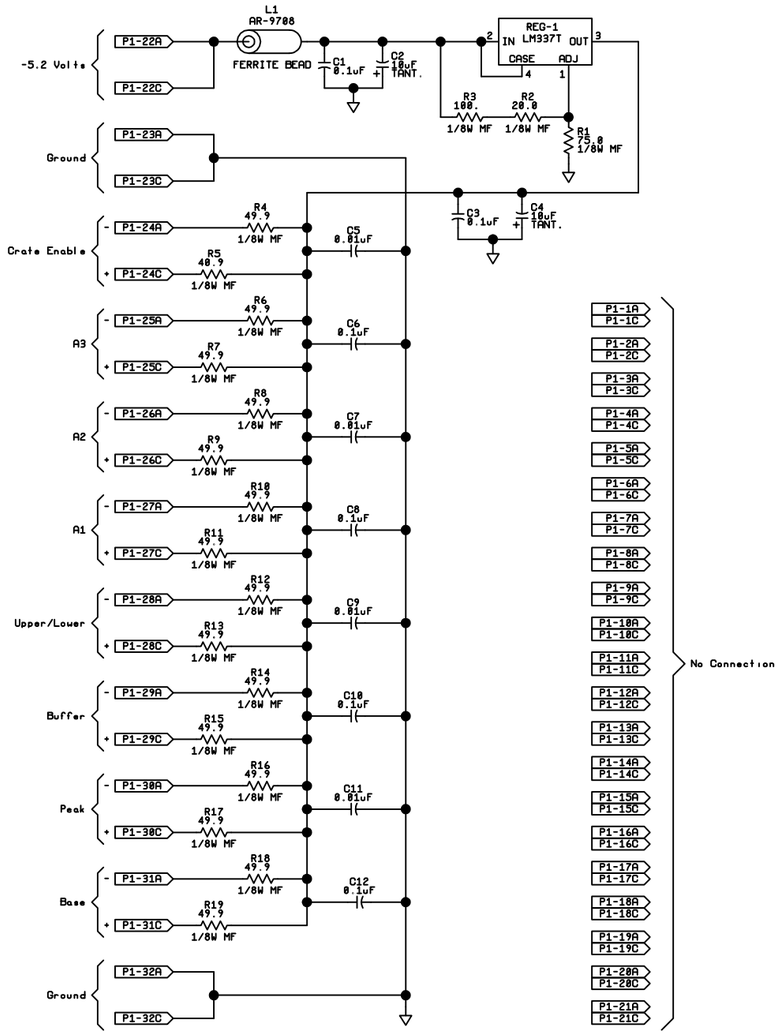

NOTE:

BACKPLANE CONNECTORS P2 AND P3 ARE NOT USED FOR THIS 9U CARD.

PRINTED CIRCUIT BOARD	
TITLE	DWG NO.
SCHEMATIC	EC-255711
ARTWORK	BD-255819
MASTER DWG	BD-286153
ASSEMBLY DWG	BD-286157
OUTLINE DWG	BD-286156
SOLDER MASK	
SILKSCREEN	
PARTS LIST	PL-286155

ITEM NO.	PART NO.	DESCRIPTION OR SIZE	QTY. REQ.
PARTS LIST			

UNLESS OTHERWISE SPECIFIED			ORIGINATOR	G. KRAFCZYK	9-28-90
FRACTIONS	DECIMALS	ANGLES	DRAWN	G. KRAFCZYK	9-28-90
+/-	+/-	+/-	CHECKED		
1. BREAK ALL SHARP EDGES 1/64 MAX. 2. DO NOT SCALE DRAWING. 3. DIMENSIONING IN ACCORD WITH ANSI Y14.5 STD S			APPROVED		
			USED ON		
MAX. ALL MACHINED SURFACE			MATERIAL		

SCIDESIGN Release 3.0

FERMI NATIONAL ACCELERATOR LABORATORY
UNITED STATES DEPARTMENT OF ENERGY

D0 CALORIMETER
BLS CRATE BUS TERMINATION
ELECTRICAL SCHEMATIC

SCALE	FILMED	DRAWING NUMBER	REV.
		3740.412-EC-255711	A