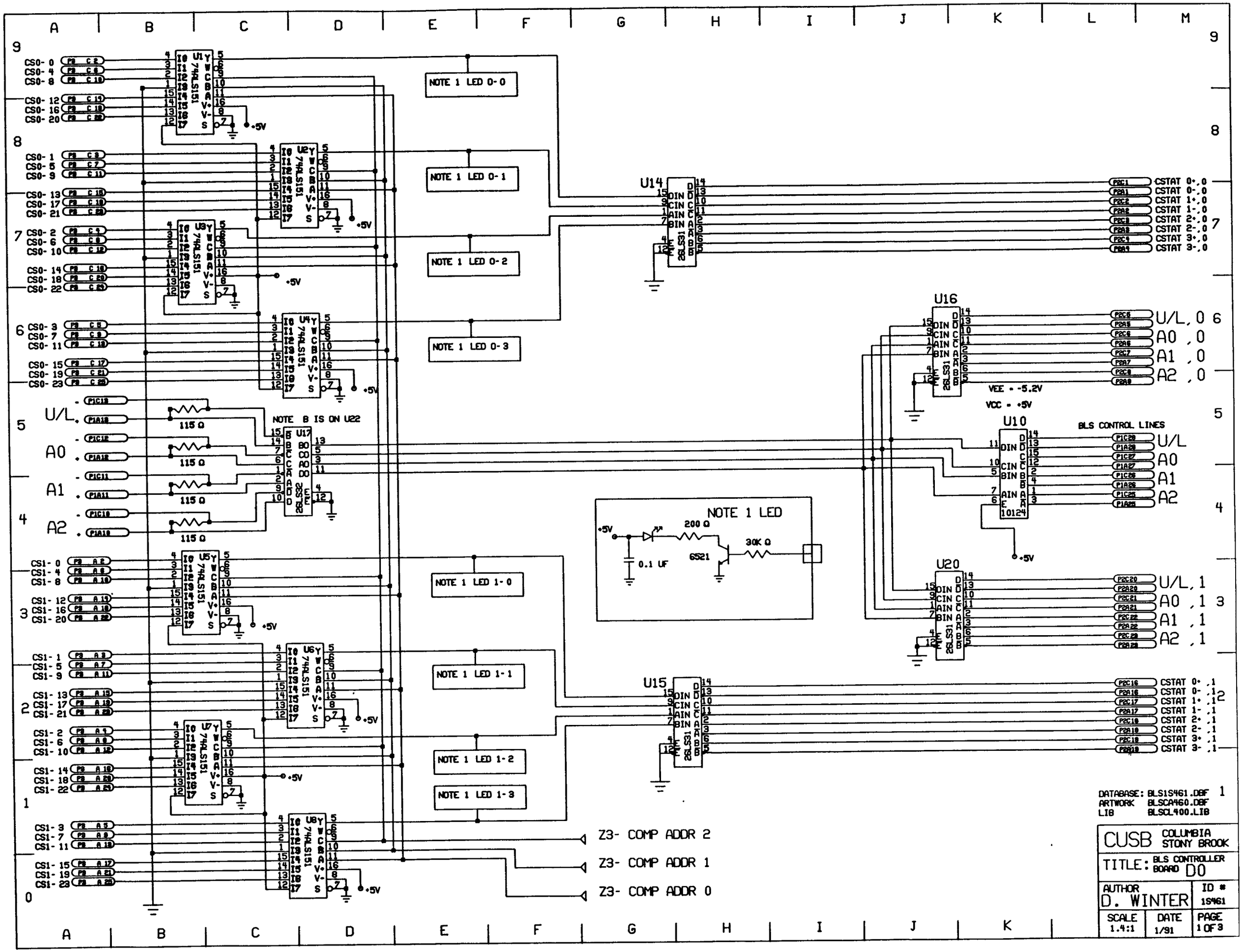
U1 74ALS151
U2 74ALS151
U3 74ALS151
U4 74ALS151
U5 74ALS151
U6 74ALS151
U7 74ALS151
U8 74ALS151
U14 26LS31
U15 26LS31
U16 26LS31
U20 26LS31
U10 10124
U17 26LS32
CSO- 0
CSO- 4
CSO- 8
CSO- 12
CSO- 16
CSO- 20
CSO- 1
CSO- 5
CSO- 9
CSO- 13
CSO- 17
CSO- 21
CSO- 2
CSO- 6
CSO- 10
CSO- 14
CSO- 18
CSO- 22
CSO- 3
CSO- 7
CSO- 11
CSO- 15
CSO- 19
CSO- 23
CS1- 0
CS1- 4
CS1- 8
CS1- 12
CS1- 16
CS1- 20
CS1- 1
CS1- 5
CS1- 9
CS1- 13
CS1- 17
CS1- 21
CS1- 2
CS1- 6
CS1- 10
CS1- 14
CS1- 18
CS1- 22
CS1- 3
CS1- 7
CS1- 11
CS1- 15
CS1- 19
CS1- 23
U/L
A0
A1
A2
115 Ω
NOTE B IS ON U22
NOTE 1 LED 0-0
NOTE 1 LED 0-1
NOTE 1 LED 0-2
NOTE 1 LED 0-3
NOTE 1 LED 1-0
NOTE 1 LED 1-1
NOTE 1 LED 1-2
NOTE 1 LED 1-3
NOTE 1 LED
200 Ω
30K Ω
6521
0.1 UF
+5V
CSTAT 0+,0
CSTAT 0-,0
CSTAT 1+,0
CSTAT 1-,0
CSTAT 2+,0
CSTAT 2-,0
CSTAT 3+,0
CSTAT 3-,0
U/L,0
A0 ,0
A1 ,0
A2 ,0
VEE = -5.2V
VCC = +5V
BLS CONTROL LINES
U/L
A0
A1
A2
U/L,1
A0 ,1
A1 ,1
A2 ,1
CSTAT 0+,1
CSTAT 0-,1
CSTAT 1+,1
CSTAT 1-,1
CSTAT 2+,1
CSTAT 2-,1
CSTAT 3+,1
CSTAT 3-,1
Z3- COMP ADDR 2
Z3- COMP ADDR 1
Z3- COMP ADDR 0
DATABASE: BLS1S461.DBF
ARTWORK BLSCA460.DBF
LIB BLSCL400.LIB
CUSB COLUMBIA STONY BROOK
TITLE: BLS CONTROLLER BOARD D0
AUTHOR D. WINTER
ID # 1S461
SCALE 1.4:1
DATE 1/91
PAGE 1 OF 3

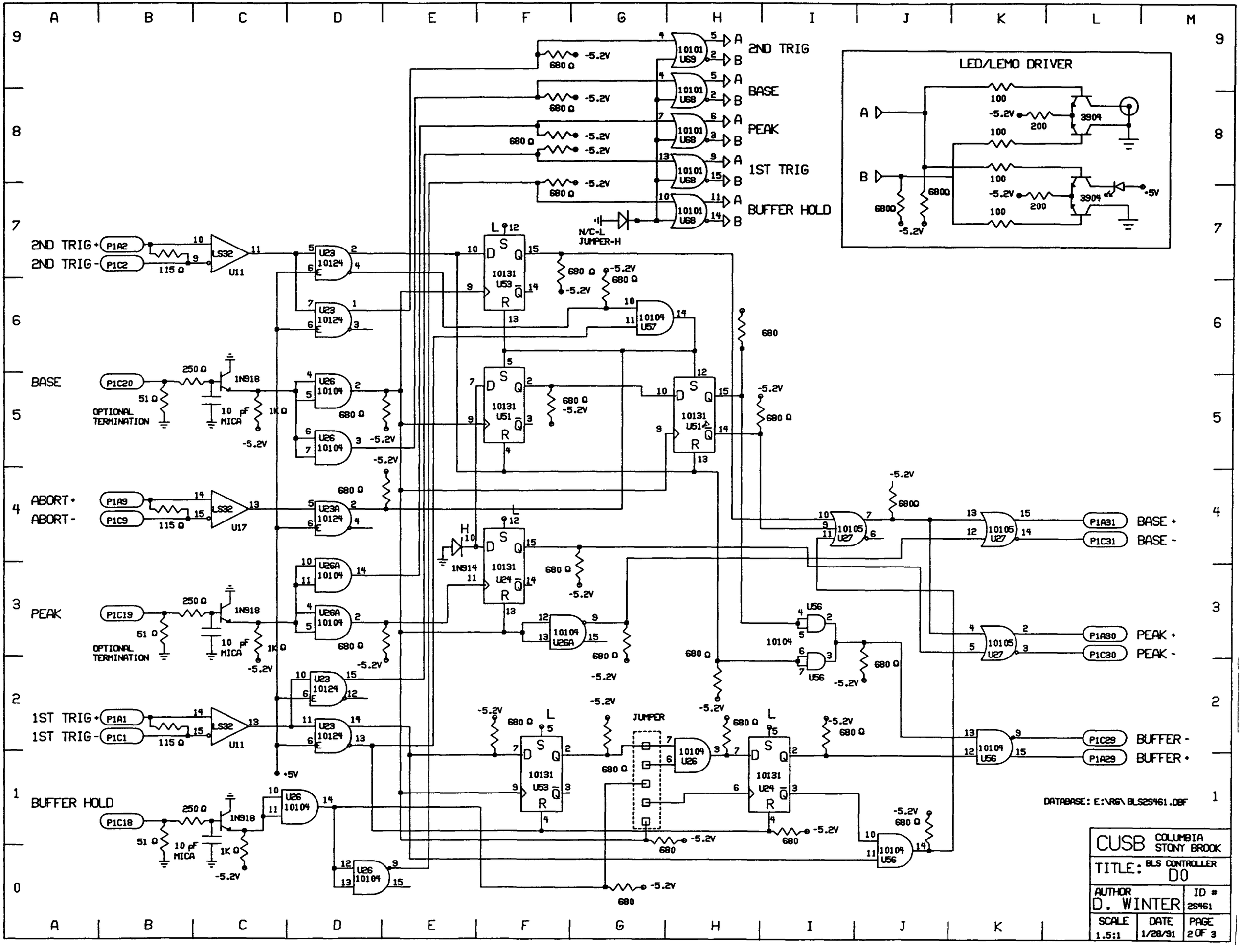
2ND TRIG
BASE
PEAK
1ST TRIG
BUFFER HOLD
LED/LEMO DRIVER
2ND TRIG +
2ND TRIG -
ABORT +
ABORT -
1ST TRIG +
1ST TRIG -
BASE +
BASE -
PEAK +
PEAK -
BUFFER -
BUFFER +
OPTIONAL TERMINATION
N/C-L JUMPER-H
JUMPER
DATABASE: E:\RG\BLS2S461.DBF
CUSB COLUMBIA STONY BROOK
TITLE: BLS CONTROLLER D0
AUTHOR D. WINTER
ID # 2S461
SCALE 1.5:1
DATE 1/28/91
PAGE 2 OF 3

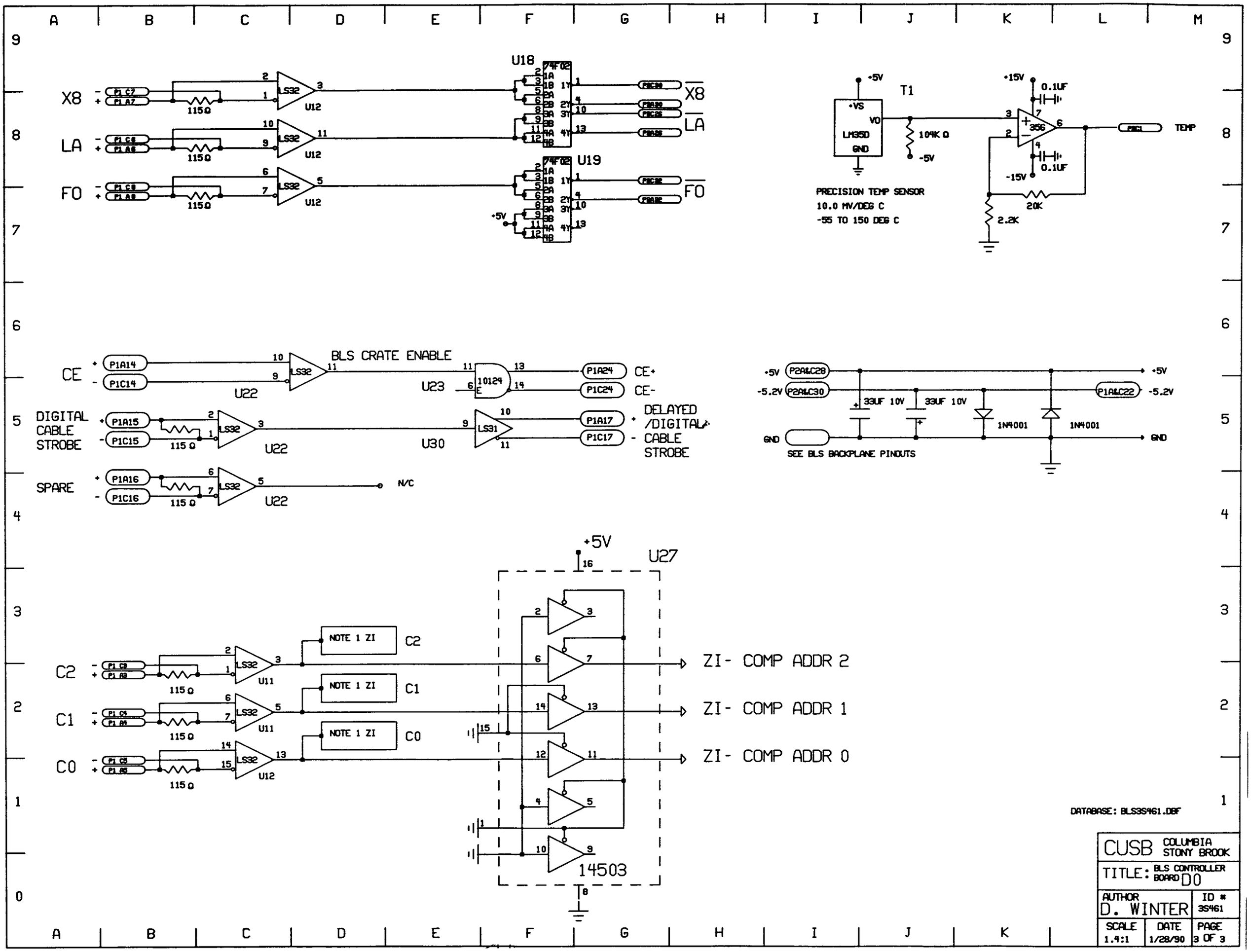
X8
LA
FO
P1C7
P1A7
P1C8
P1A8
P1C9
P1A9
115Ω
LS32
U12
U18
74F02
U19
X8
LA
FO
+5V
T1
+VS
VO
LM35D
GND
104K Ω
-5V
+15V
0.1UF
356
-15V
20K
2.2K
PRECISION TEMP SENSOR
10.0 MV/DEG C
-55 TO 150 DEG C
P1C1
TEMP
CE
P1A14
P1C14
U22
BLS CRATE ENABLE
U23
10124
P1A24
P1C24
CE+
CE-
DIGITAL
CABLE
STROBE
P1A15
P1C15
115 Ω
U30
LS31
P1A17
P1C17
DELAYED
/DIGITAL
CABLE
STROBE
SPARE
P1A16
P1C16
N/C
+5V
P2A&C28
-5.2V
P2A&C30
33UF 10V
1N4001
P1A&C22
GND
SEE BLS BACKPLANE PINOUTS
C2
C1
C0
P1C2
P1A2
P1C1
P1A1
P1C0
P1A0
U11
NOTE 1 ZI
U27
14503
ZI- COMP ADDR 2
ZI- COMP ADDR 1
ZI- COMP ADDR 0
DATABASE: BLS3S461.DBF
CUSB
COLUMBIA
STONY BROOK
TITLE: BLS CONTROLLER BOARD D0
AUTHOR
D. WINTER
ID #
3S461
SCALE
1.4:1
DATE
1/28/90
PAGE
3 OF 3