REV.	DESCRIPTION	DRAWN	DATE
		APPD.	DATE

SOLDER TUBE TO BACK OF PLATE

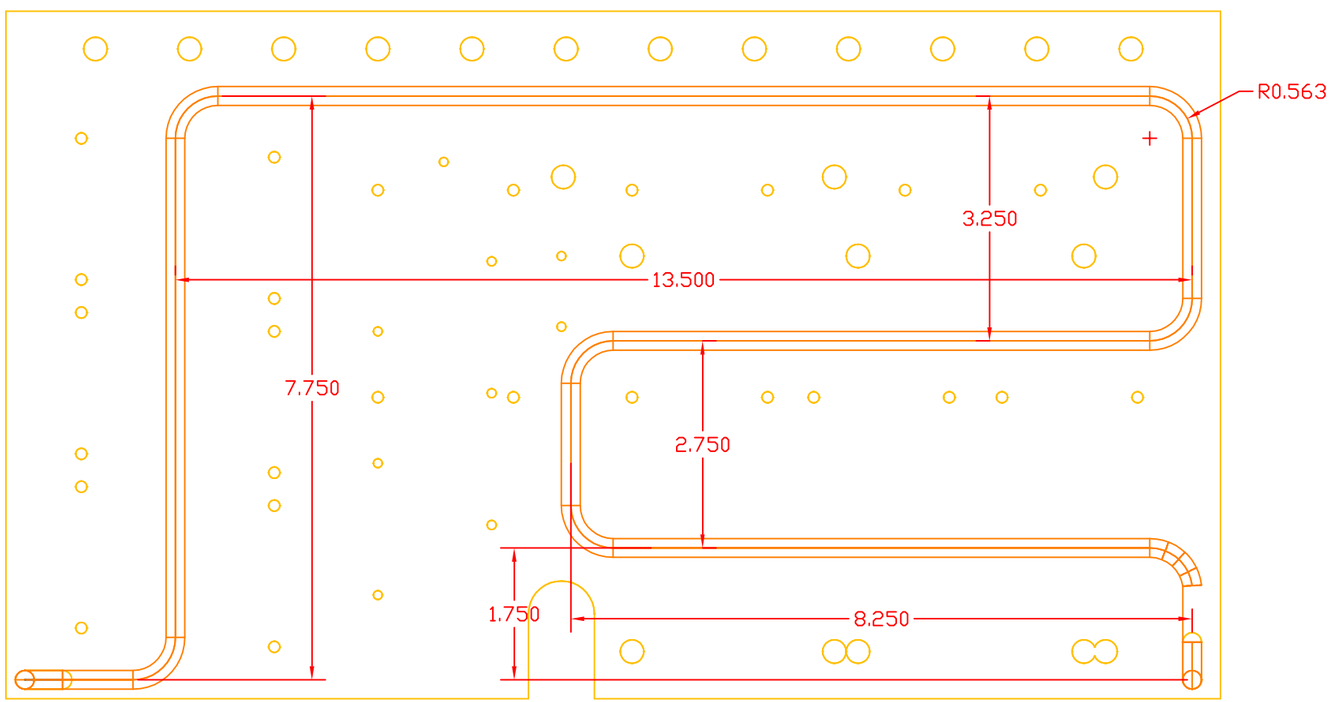

1/4" COPPER TUBING
SOLDERED TO PLATE
WITH EUTECROD #157
OR EQUAL
1/8" MIN. RAD FILL

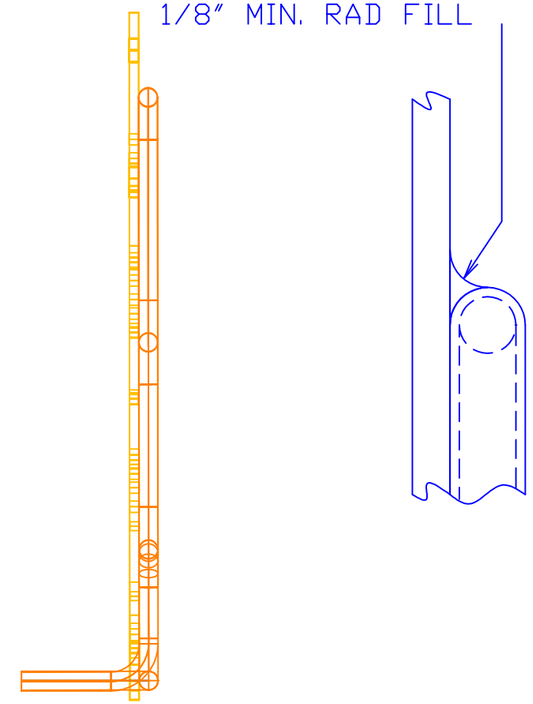

NOTE: FINISH WITH BRIGHT TIN
PLATING 0.0005" MIN.
AFTER SOLDERING TUBE

ITEM	PART NO.	DESCRIPTION OR SPEC	QTY.
		PARTS LIST	

UNLESS OTHERWISE SPEC.		DESIGNED	D. L. HUFFMAN	9/9/89
FRACTIONS	DECIMALS	ANGLES	DRAWN	
			CHECKED	
			APPROVED	
			USED ON	MD-286013
			MATERIAL-	1/4" O.D. REFRIGERATION TUBE 5230 VALI

FERMI NATIONAL ACCELERATOR LABORATORY
UNITED STATES DEPARTMENT OF ENERGY

D0 SYSTEM LOW VOLTAGE P.S.
COOLING TUBE ASSEMBLY DWG

SCALE	FILMED	DRAWING NUMBER	REV.
		3740.412-MD-286014	A