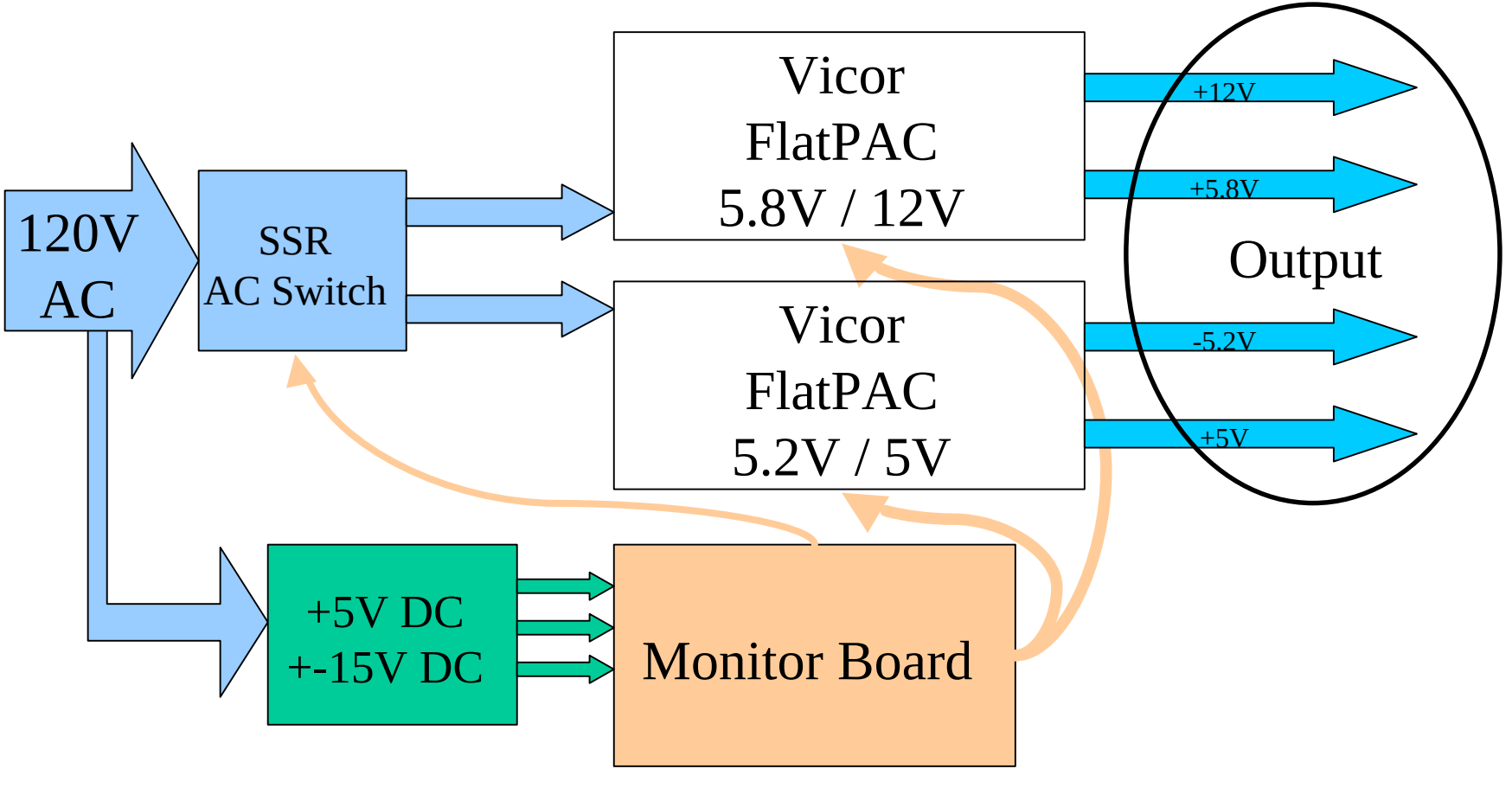French Calibration Pulser Power Supply