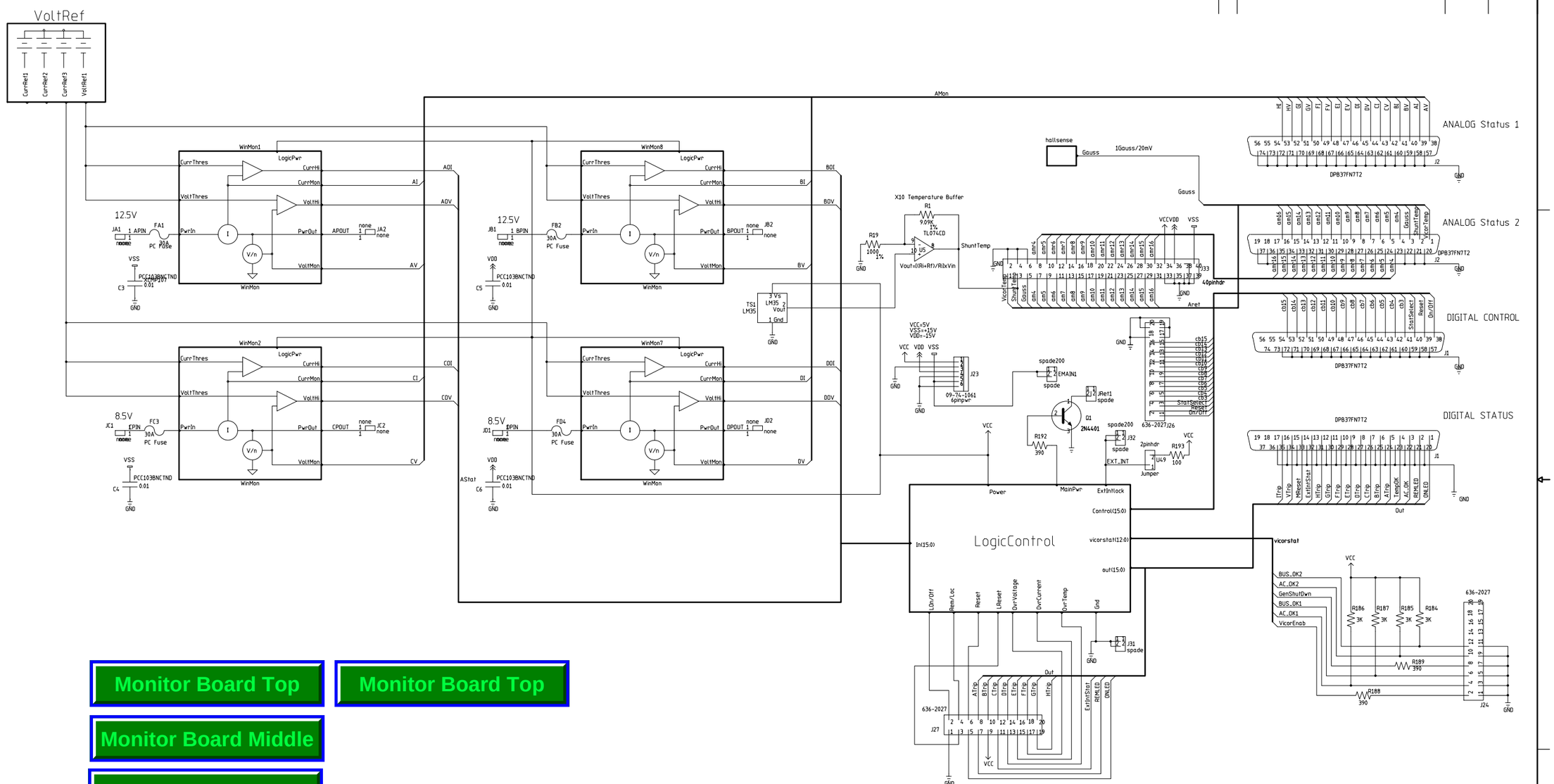

Monitor Board Top

Monitor Board Top

Monitor Board Middle

Monitor Board Grnd

Monitor Board Bottom

Monitor Board Bottom

REVISIONS			
REV	DESCRIPTION	DATE	APPROVED

CONTRACT NO.		
APPROVALS	DATE	Calorimeter Upgrade Pulser Power Supply Monitor Board
DRAWN	05/22/2002	
CHECKED		
ISSUED		SIZE D · FSCM NO. · DWG. NO. 3823.121.ED-330273 · REV
		SCALE · SHEET 01

H:8ND; V:4LA

DWG. NO.	SH.	REV

REVISIONS

REV	DESCRIPTION	DATE	APPROVED

CONTRACT NO.	
APPROVALS	DATE
DRAWN	05/22/2002
CHECKED	
ISSUED	

Preamp Power Supply
Monitor Board

SIZE	FSCM NO.	DWG. NO.	REV
D			
SCALE		SHEET 02	

H=8ND; V=4LA