Date: 21 March 2001

Project: Intercryostat Detector Electronics
Subject: Low Voltage Distribution

This note and supplemental documents describe the low voltage distribution system designed to deliver power to the Intercryostat Detector (ICD) preamplifiers (preamps).

General Information

The preamps used by the ICD are the I-type version of those used in the rest of the calorimeter readout, differing only in the integrating capacitor value (22pF) and two resistors in the output shaping circuit, which "stretches" the ICD PMT signal to look like a calorimeter signal. These preamps are mounted on circuit boards (six per board), and each board is housed in an ICD electronics "drawer". These drawers also contain the photomultiplier tubes (PMTs) and the high voltage bases for the PMTs. The drawers are installed into ICD crates (16 per crate) which are mounted beneath the cable winders in each detector quadrant. The ICD signal readout is part of the calorimeter BLS/ADC system.

The following electronics systems used by the ICD are identical with the calorimeter as a whole, and are described in their corresponding Operational Readiness Review documents:

- The preamps.
- The preamp power supply.
- The high voltage power supply. (In addition, a document detailing the safe usage of the ICD high voltage distribution system was submitted and accepted.)
- The preamp pulser and fan-out card.
- The pulser power supply.
- The BLS/ADC readout.

Those items unique to the ICD electronics are the low voltage fan-out system, electronics drawers, voltage supply cables, and the racks in which the power supplies are mounted. Figure 1 shows the general layout of the ICD tiles and crates.

The low voltage for the ICD preamps is supplied by a custom VME-controlled power supply, designed by Dave Huffman of FNAL. It is identical in operation to a calorimeter low voltage power supply. The ICD low voltage power supply is located on rack PW09 on the western side of the platform (Figures 2-4). The power supply will provide three separate voltages: 8 V @ 10 Amps, 12 V @ 10 Amps and –6 V @ 10 Amps. The power will be supplied to each of the 48 ICD electronics drawers. The voltage and current can be monitored via a computer connection. If any voltage or current exceeds a set level, all output voltages will be disabled. This is done to prevent the application of partial power to the preamps. The supplies are fused on the primary 208 V AC input and the DC output. A solid state 3-phase relay is used to control the application of AC power to the supply. There is a local On/Off, Reset and Local/Remote switch on the front panel. There are LED indicators on the front panel showing the status of the supply.

Requirements

The design must meet all Fermilab electrical safety standards and all components must be rated for the maximum current and temperatures to which they will be exposed. Voltages delivered to the preamplifiers must be within 0.1V of the nominal values.

Details of Implementation

The power path from the wall socket to the fan-out card is shown in Figures 5-9. One power supply provides the three voltages to each of the four ICD crates. Each voltage and associated ground is split 1:4 by Stinger gold plated power distribution blocks (SDB2 4 GA to 10 GA). The splitters are mounted with nylon screws to a panel installed near the bottom of the PW09 rack (Figures 12-13). Three pairs of conductors are required to distribute each of the three voltages and associated grounds to the four quadrants. For each quadrant, one three-conductor (202-10-3503) and one four-conductor (202-10-3504) Okonite-FMR 10 AWG cable are used. The insulated conductors are UL rated VW-1, and pass vertical tray flame test of UL 1277 for type TC power and control tray cable. The 90ºC wet or dry ampacity of the Okonite cables is 30 Amps per conductor. The calorimeter low voltage power supply provides a maximum 10 Amps at each voltage. The large size cable was picked primarily to minimize the voltage drop between the supply and the preamplifiers. One of the conductors in the three-conductor cable is not used.

The Okonite cables are routed to the ICD crates at each detector quadrant via the false platform floor, the vertical chutes and the cable winders. The low voltages are distributed to the ICD drawers through a fan-out card mounted below the ICD crates. The fan-out card is a long PC board with individual fuses for each voltage to each drawer. Three pairs of conductors are fed into a terminal block (Divisible Europa Strip). The block is a 6-pole strip rated at 40 Amps with a maximum thickness of a 10 AWG conductor. The terminal block is connected to the fan-out card via short runs of hookup wire, soldered directly to the PC board. The voltages for each drawer are fused with GMA 5 x 20 mm fast-acting glass fuses, rated to 500 mAmps. The voltages are fed to the ICD drawers by short patch cables, which are Alpha brand, item 6428, multi-pair foil-shielded tray cable, 18 AWG, UL type CM/PLTC, CSA PCC ft4. The patch cable with the foil shield and outer plastic jacket removed was also used to fashion the cable harness within the low voltage fan-out. Similar 22 AWG wire is used for the jumpers from the fan-out PC board to the bulkhead connectors. Figure 10 shows a photo of an assembled low voltage fan-out with the pulser fan-out and cables attached. Figure 4 shows a schematic of the low voltage fan-out card and fuse layout.

Also housed with the low voltage fan-out card is the fan-out card for the ICD pulser system. This pulser system is identical to the calorimeter pulser system, and has been reviewed as part of the calorimeter preamp pORC review. The pulser and pulser power supply are mounted in the same rack (PW09) as the ICD low voltage power supply.

The low voltage fan-out is mounted in a custom-made aluminum box isolated by plastic washers. The pulser fan-out is mounted to the back of the low voltage fan-out by plastic standoff posts. The low voltage supply cables enter the low voltage fan-out housing via a rectangular aperture in the side. The supply cables attach to a Divisible Europa Strip connection block mounted on the back of the housing. A cable harness consisting of 18 AWG hookup wire is connected to the Europa strip at one end, and soldered to the low voltage fan-out PC board at the other end. A similar hookup wire is used to connect each voltage, via a fuse, to a bulkhead connector mounted on the front of the low voltage fan-out housing. The multi-pair patch cables connect to the bulkheads and the corresponding connectors on the ICD drawers. The pulser current supply cables and the pulser command cables which run from the PW09 rack enter through the other side aperture. The pulser fan-out cables exit through a long narrow slit on the front of the housing and are connected to the ICD drawers. The low voltage housing is mounted below the ICD crate, with a large mounting screw at each side. Figure 11 shows a mounted fan-out in place below one of the ICD crates.

Rack Monitor Interface

Each LED is green if conditions are normal and red if a fault has been triggered. A fault will remain once triggered, and the associated LED will remain red until a computer generated reset occurs or until the RESET button is pressed. The control of the rack monitor interface is via a cable from the 1553 to a 37-pin D connector. The only control function available is RESET.

The smoke detector sensor is connected into a wire harness that enters the rear of the rack monitor interface. A +20 V and ground are supplied to the smoke detector. The +20 V is interrupted when a RESET occurs to clear the detector condition. The RESET is supplied by a front panel push button or by an output bit from the 1553. A fault occurs if the detector smells smoke or if the cable is disconnected. If a fault occurs, the front panel Smoke Detector LED is lit, the annunciator is activated and the OK/Smoke bit supplied to the 1553 changes to indicate smoke. A Fault Out signal is produced to disable the power supply.

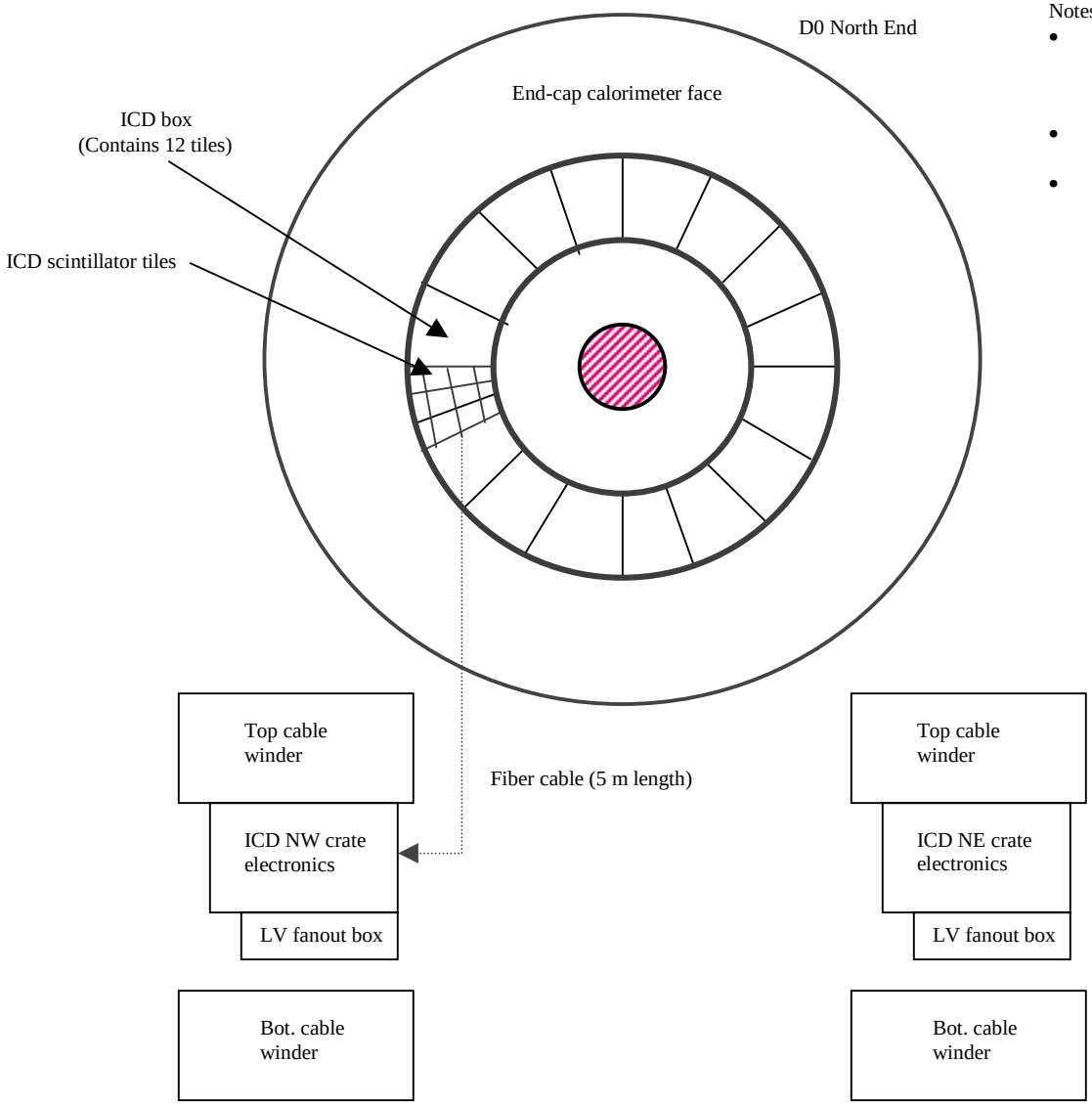

Notes:

- There are 16 ICD boxes for each endcap with 12 scintillator tiles in each box. This equates to 12x16=192 signal channels per endcap, or 96 per quadrant.
- The tiles are connected to the ICD crates by fiber cables, five meters in length.
- Each ICD electronics crates contains 16 ICD electronics drawers, 6 PMTs per drawer.

Figure 1: Conceptual view of the ICD layout

ICD Platform Rack - Front View

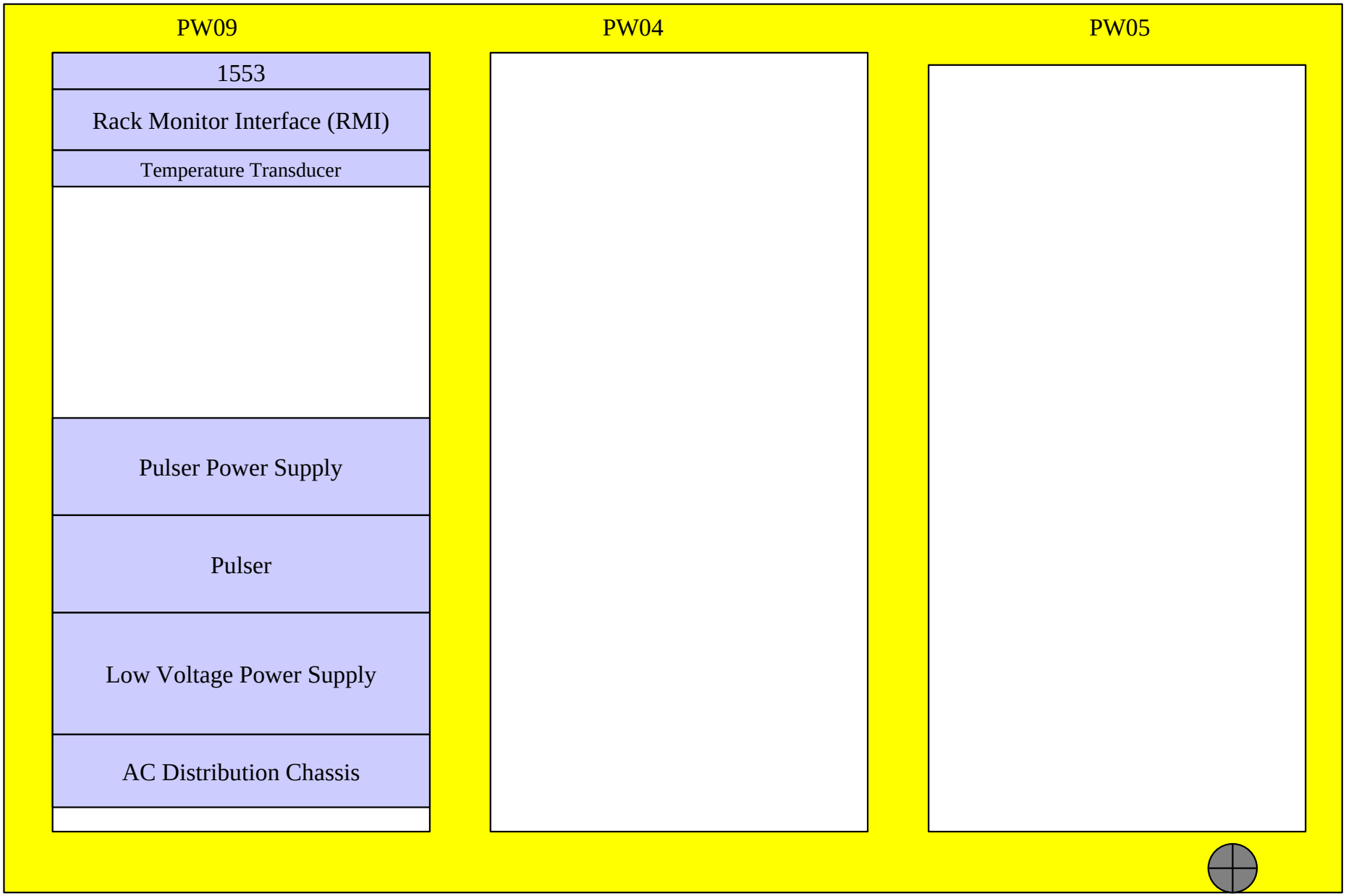

PP/D0/PL3
CKT 2/4/6

ICD Platform Rack - Back View

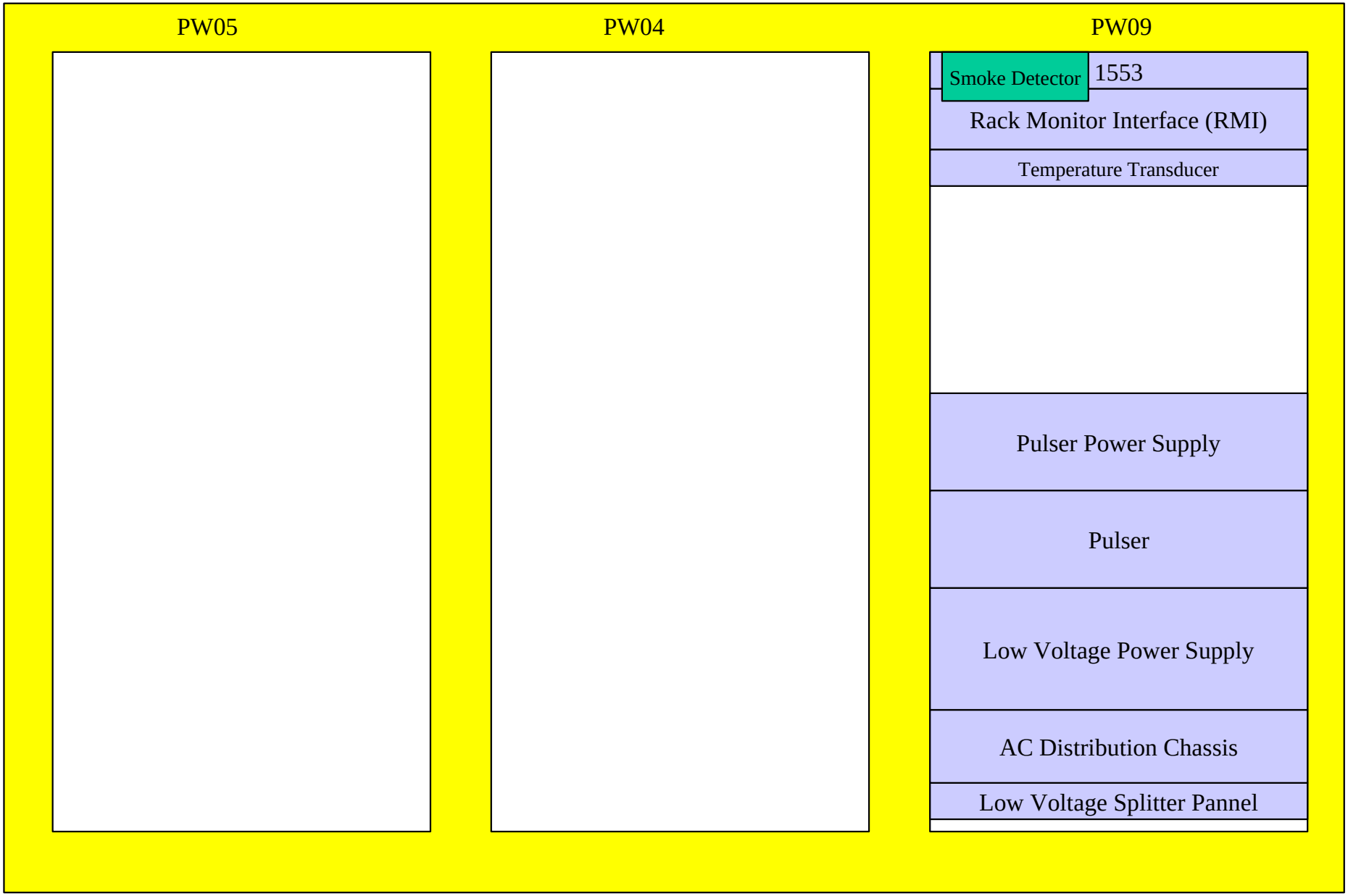

Figure 4

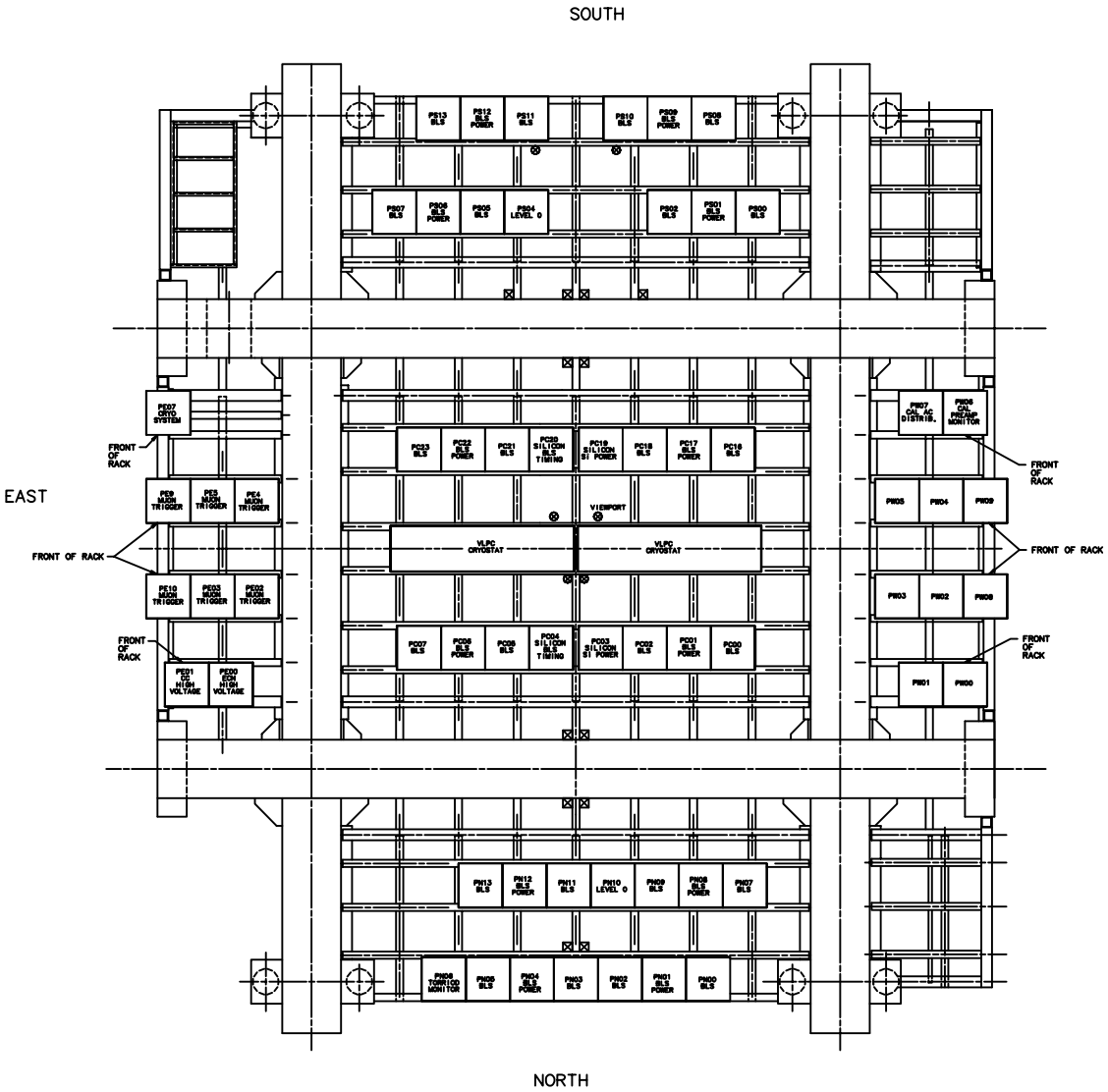

PRELIMINARY
12/8/99

REV.	DESCRIPTION	DRAWN / APPROVED	DATE / DATE

ITEM NO.	PART NO.	DESCRIPTION OR SIZE	QTY. REQ.

PARTS LIST

UNLESS OTHERWISE SPECIFIED			ORIGINATOR	M.JOHNSON
.XX	.XXX	ANGLES	DRAWN	N.CADENA
±	±	±	CHECKED	
			APPROVED	
			USED ON	
			MATERIAL	

1. BREAK ALL SHARP EDGES .015 MAX.
2. DO NOT SCALE DRWG.
3. DIMENSIONING IN ACCORD STD. ANSI Y14.5M-1982 STD.
4. ALL DIMENSIONS ARE IN INCHES.

MAX. ALL MACHINED SURFACES

FERMI NATIONAL ACCELERATOR LABORATORY
UNITED STATES DEPARTMENT OF ENERGY

RD/MECHANICAL SUPPORT DEPT.
D-ZERO UPGRADE
RACK LAYOUT

SCALE	DRAWING NUMBER	SHEET NO.	REV.
	9214.000-ME-367270	1 OF 6	

Figure 5

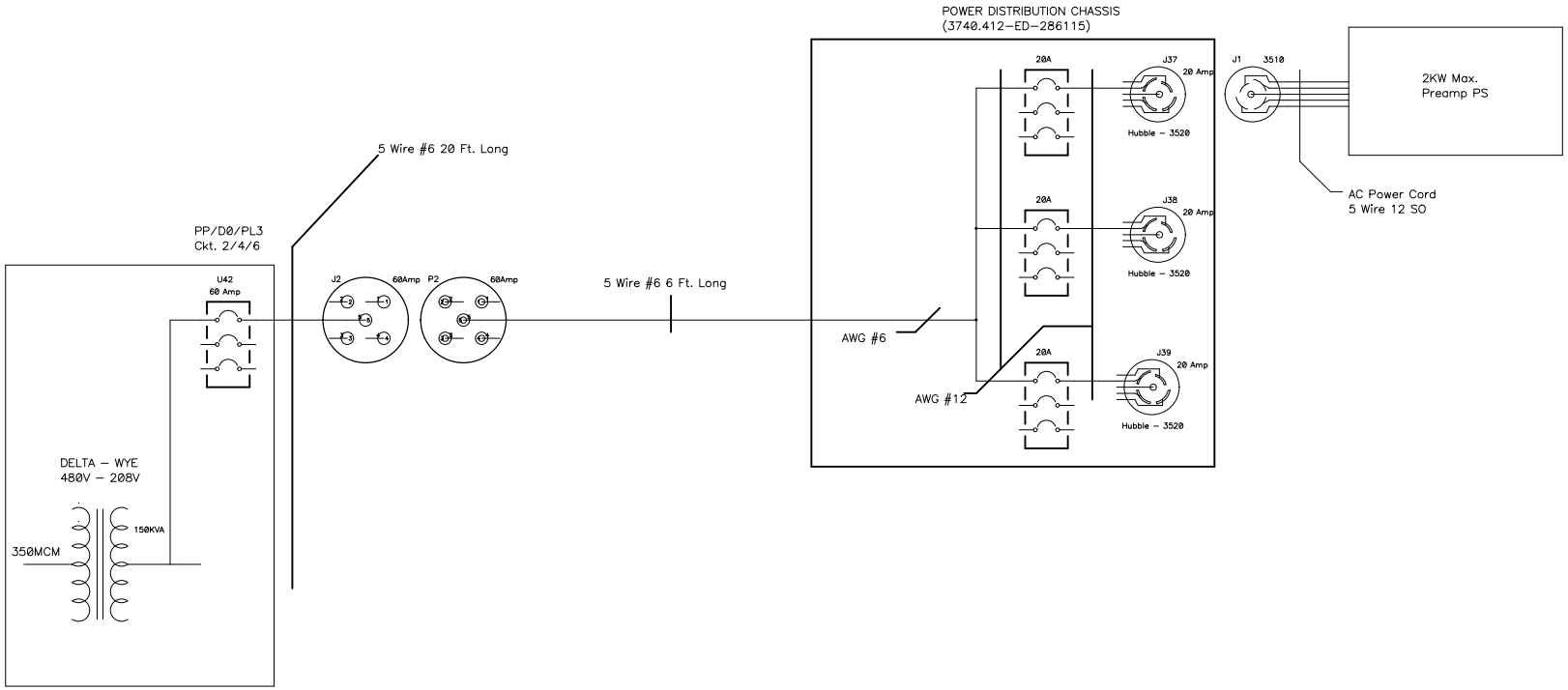

Title	14:25:55 Wed Apr 11 2001 ICD AC DISTRIBUTION	
Size D	Number 3740.412-ED-	Rev B
Date February 28, 2001		David L. Huffman
Filename ICD_AC_Dist.SCH		Sheet 1 of 1

Figure 6

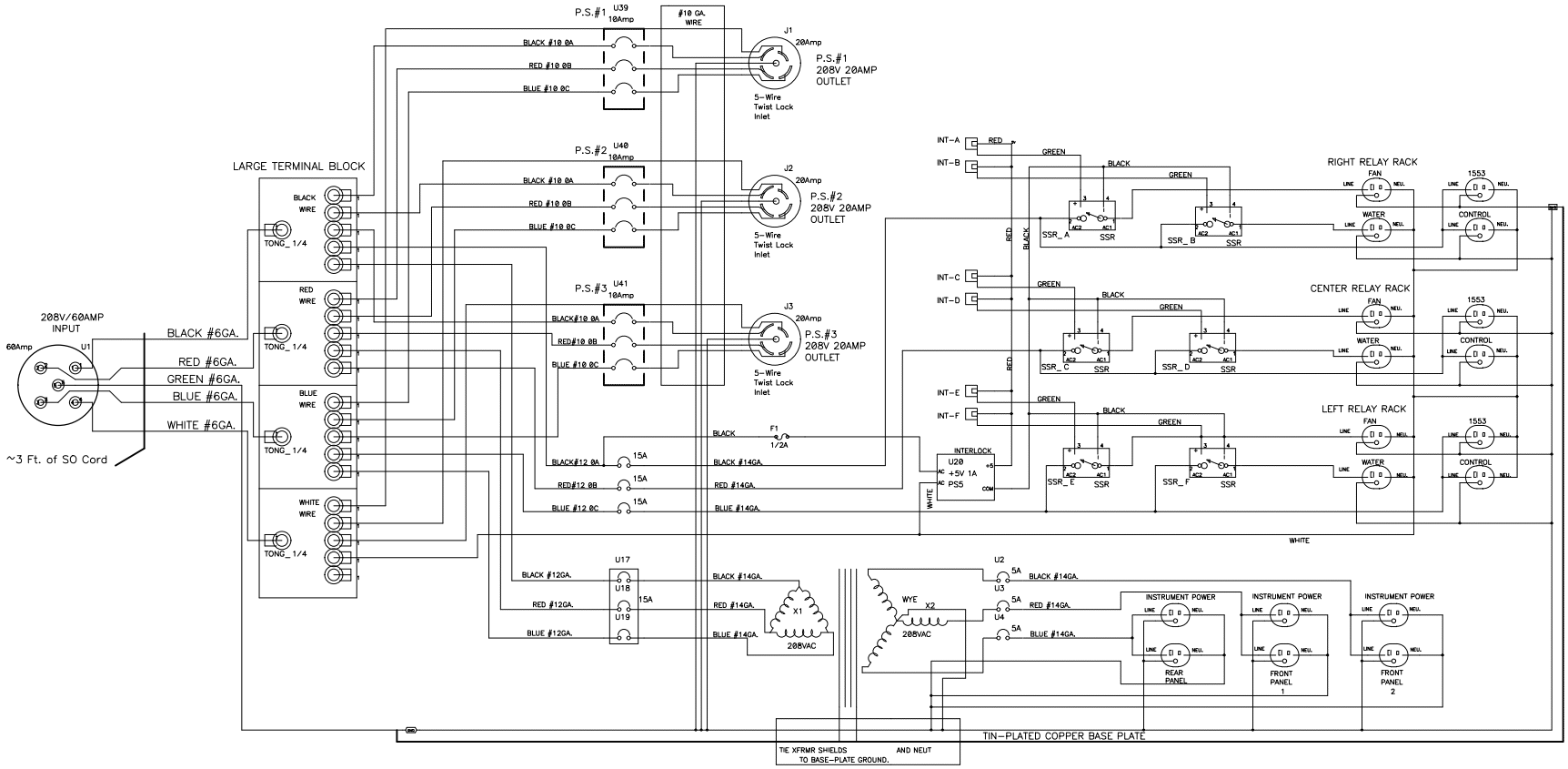

Title 14:28:00 Wed Apr 11 2001 POWER DISTRIBUTION CHASSIS		
Size D	Number 3740.412-ED-286115b	Rev D
Date March 1, 2000	David L. Huffman	
Filename ed286115b.SCH	Sheet 1 of 1	

Figure 7

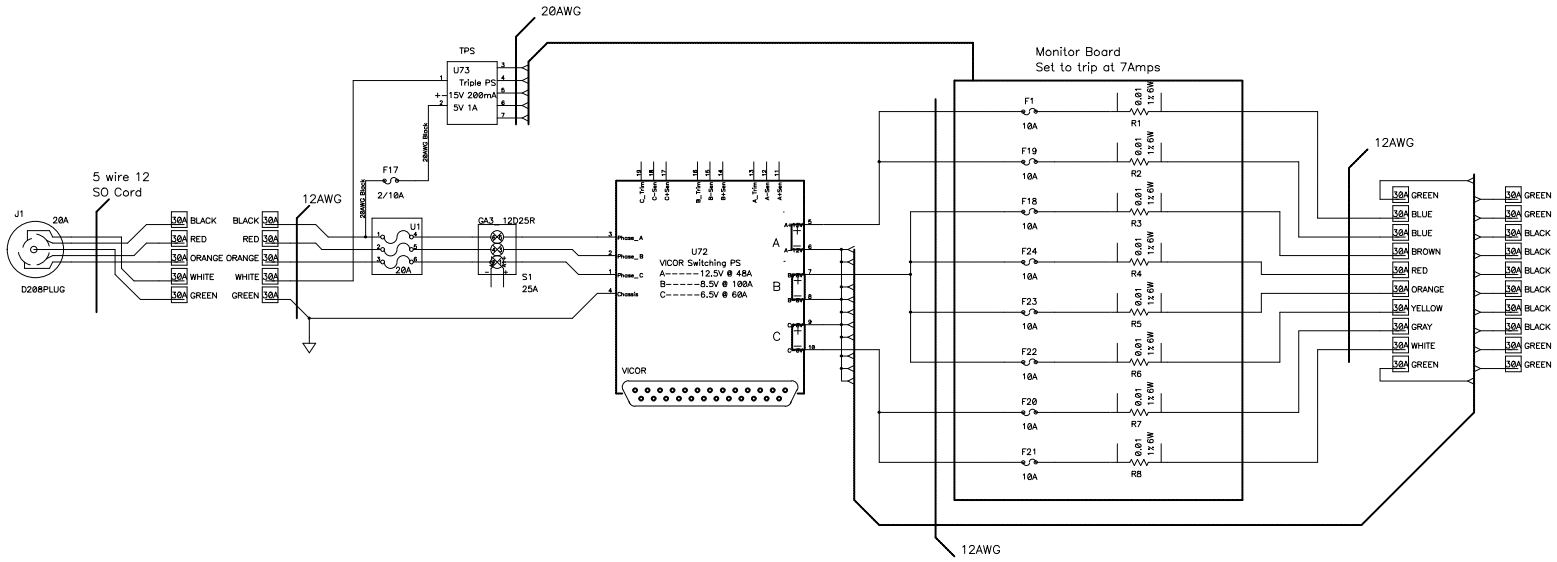

Title 14:30:39 Wed Apr 11 2001 Preamp Power Dist. LineDrawing		
Size D	Number 3740.412-ED-286241	Rev C
Date March 6, 2000		David L. Huffman
Filename ED286241b.SCH		Sheet 1 of 1

Figure 8

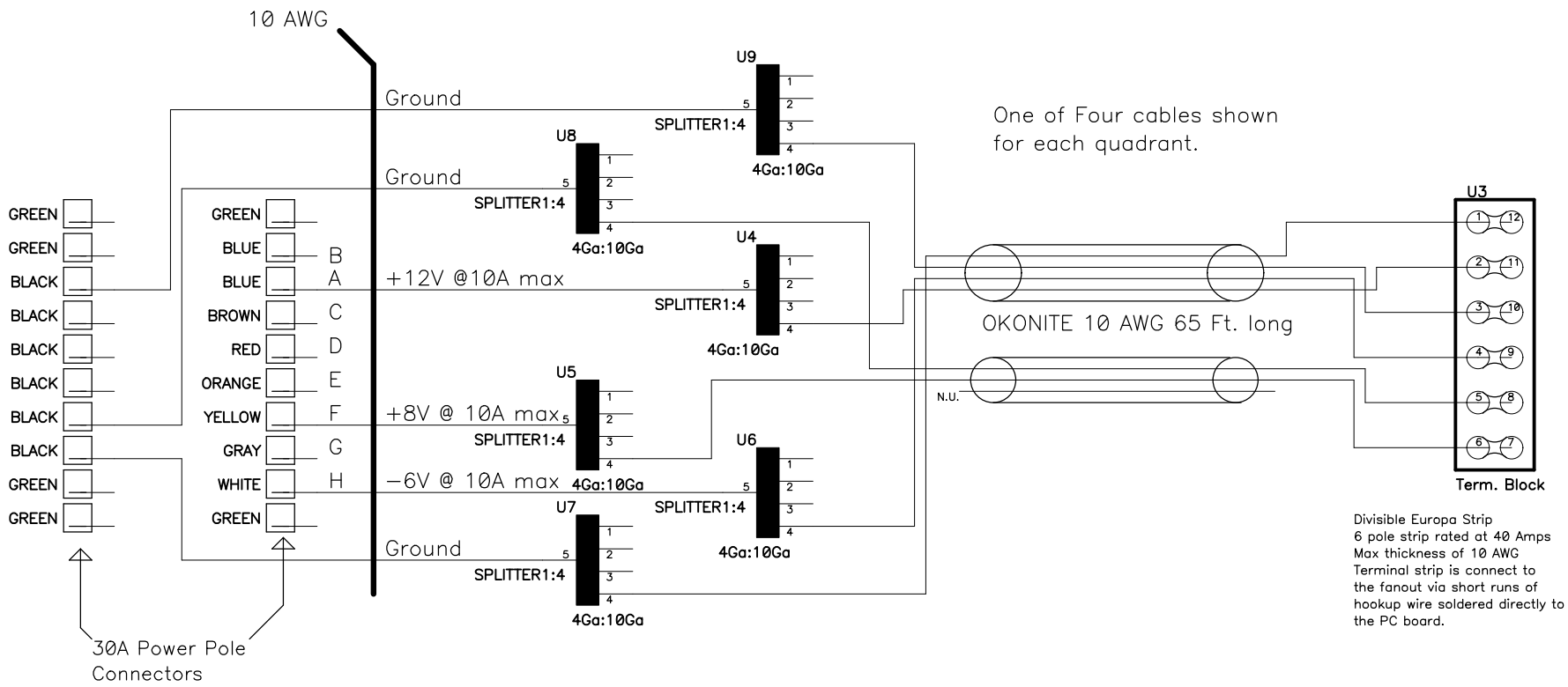

Title	14:46:19 Wed Apr 11 2001 ICD Power Cable	
Size B	Number	Rev A
Date Feb. 28, 2001		Alan Stone/David Huffman
Filename ICDFanoutCable.Sch		Sheet of 1

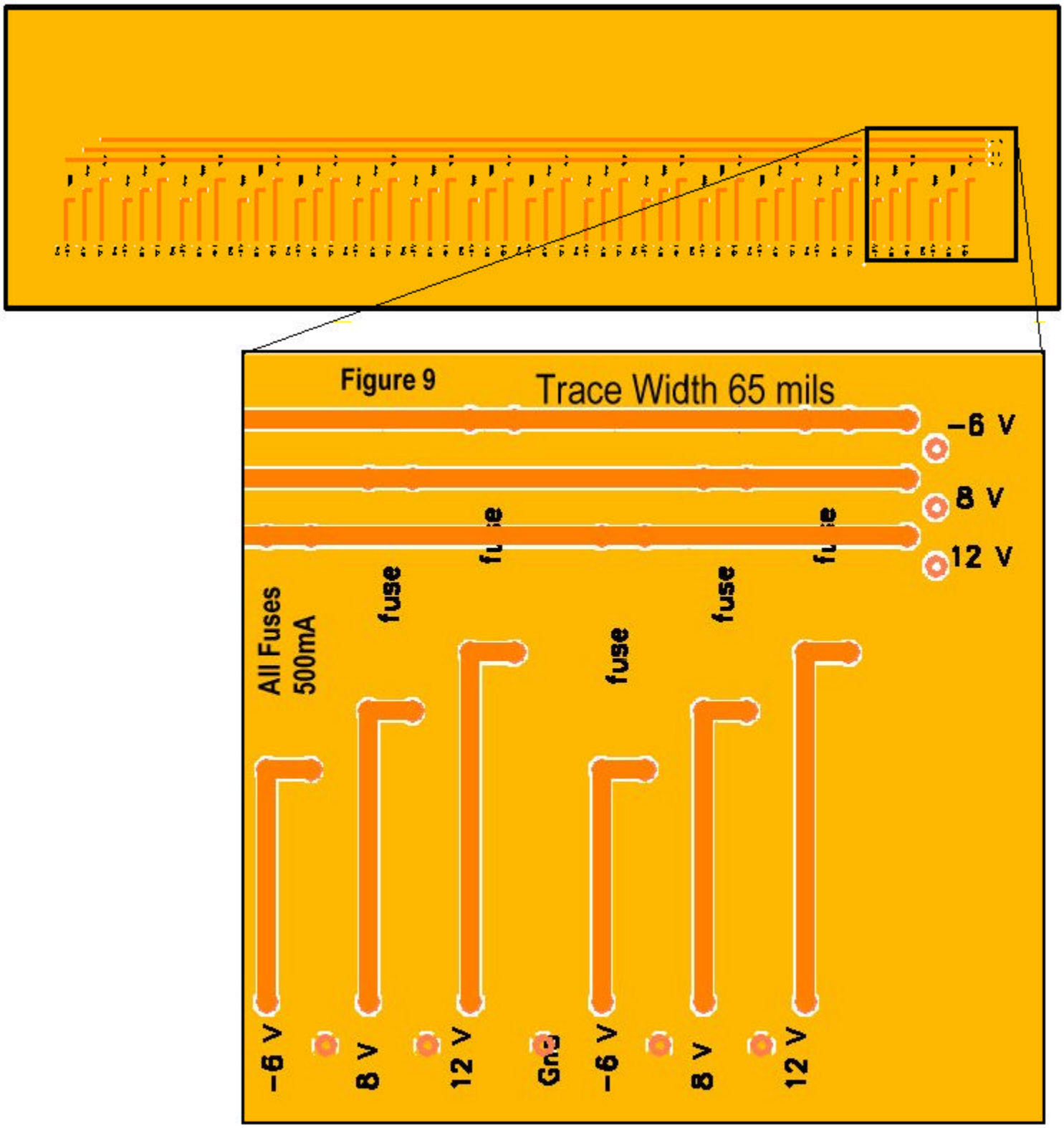
Figure 9
Trace Width 65 mils
−6 V
8 V
12 V
All Fuses
500mA
fuse
fuse
fuse
fuse
−6 V
8 V
12 V
Gnd
−6 V
8 V
12 V

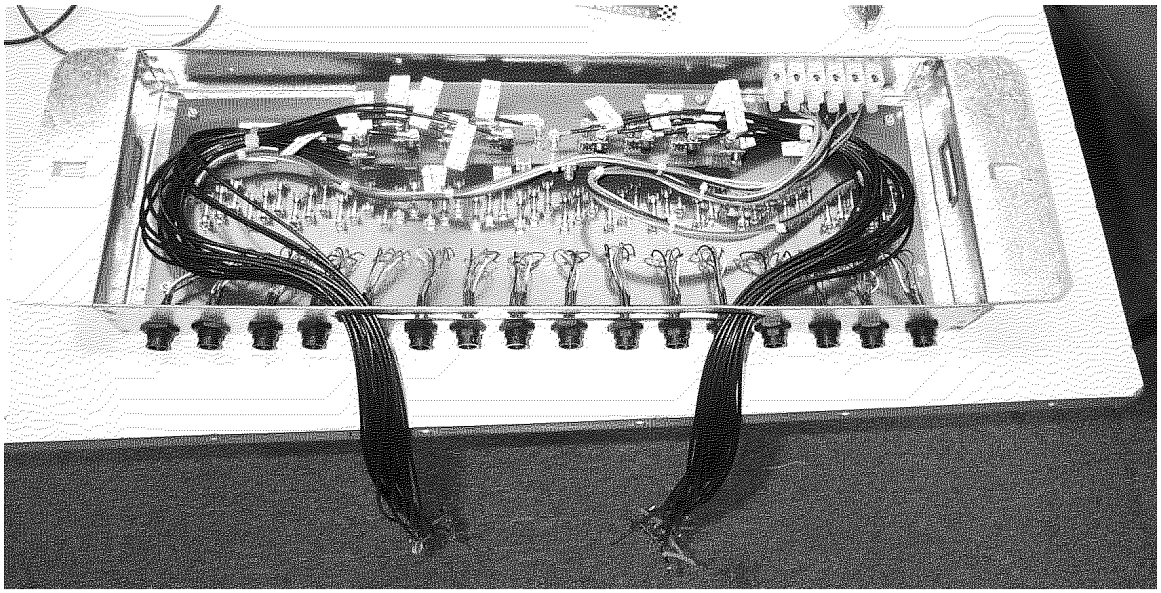

Figure 10: Photo of an assembled low voltage fan-out card and housing with the pulser fan-out cables attached.

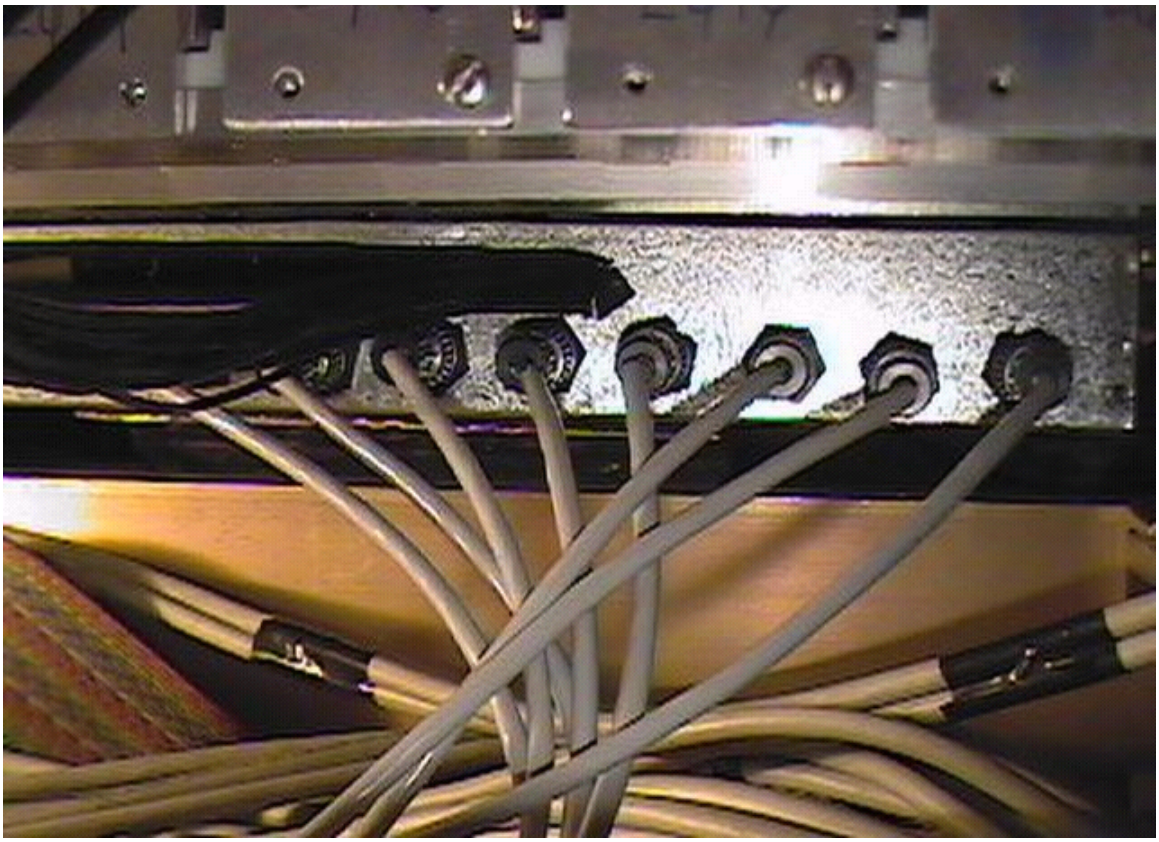

Figure 11: ICD low voltage fan-out mounted below an ICD crate.

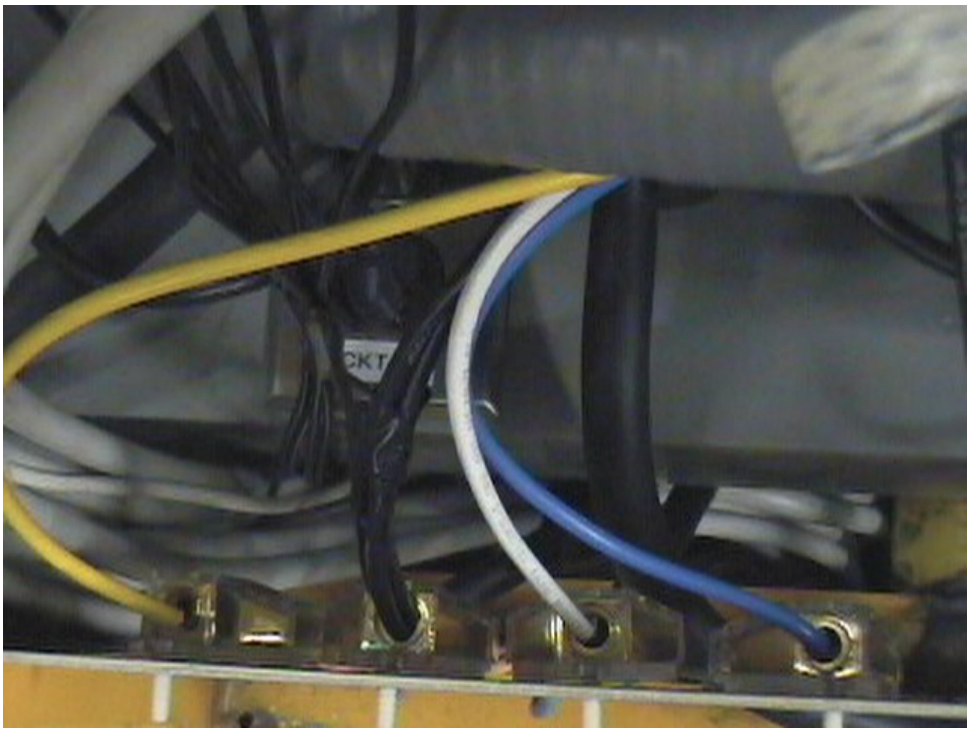

Figure 12: Input cables from low voltage power supply to splitter.

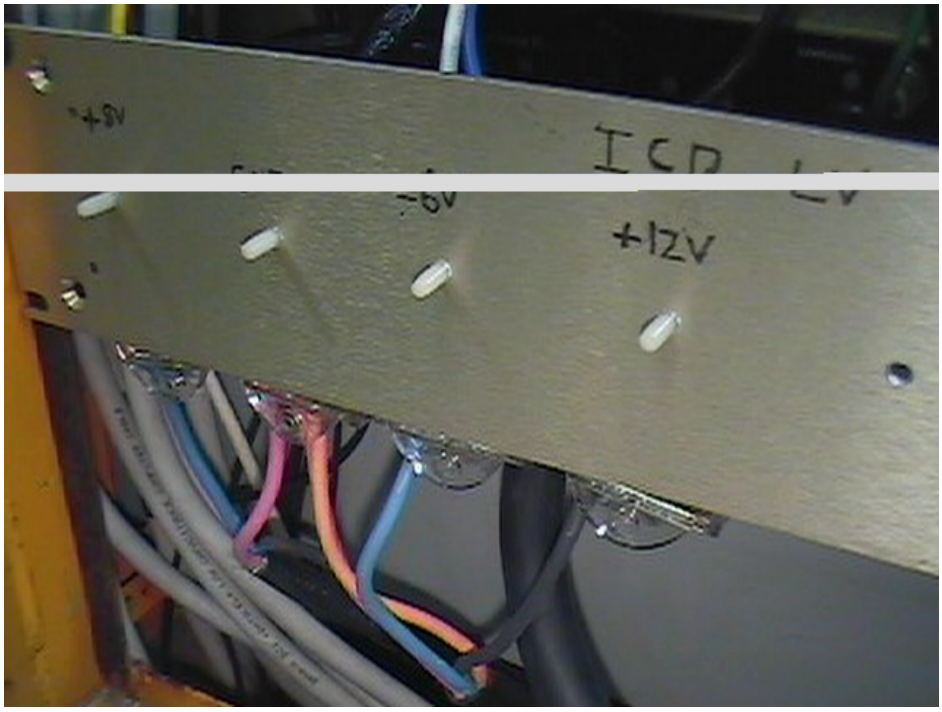

Figure 13: Low voltage splitter panel.

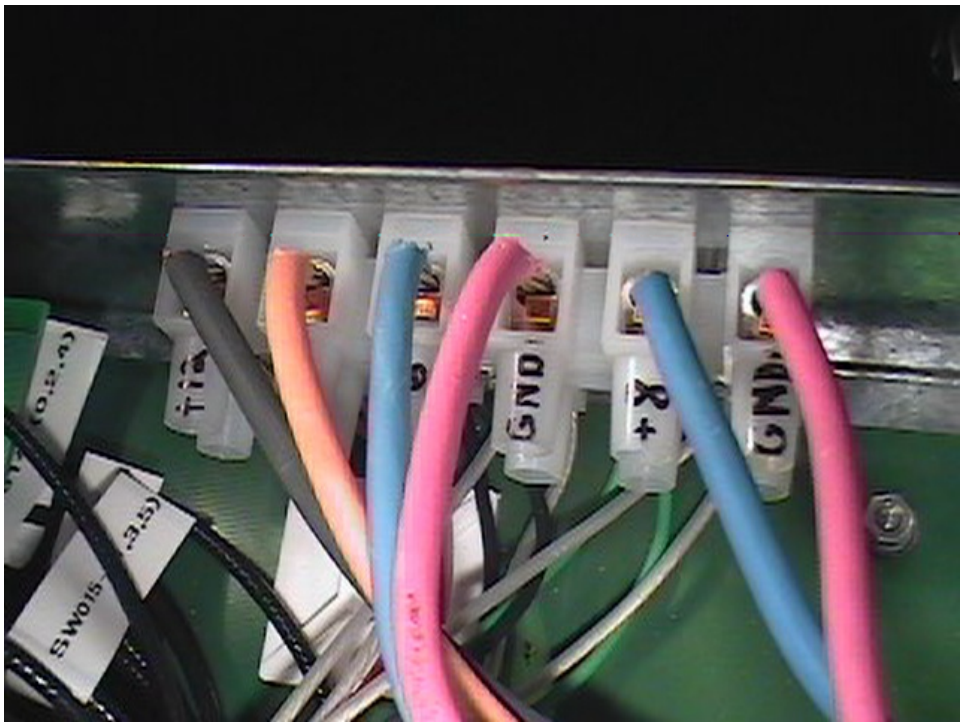

Figure 14: Terminal block for low voltage fan-out.

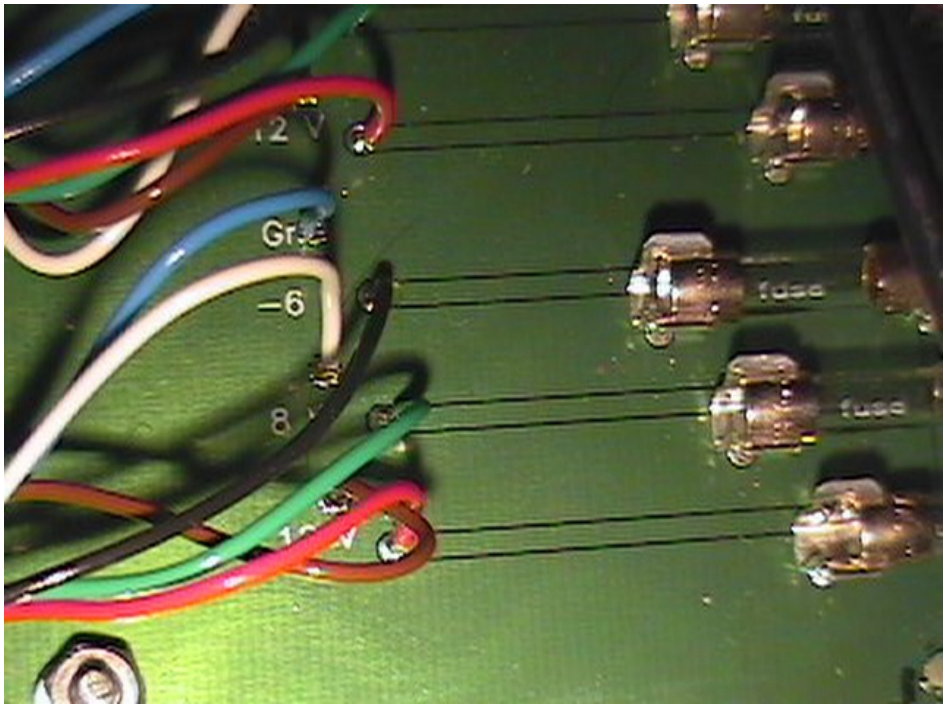

Figure 15: Segment of low voltage fan-out board.

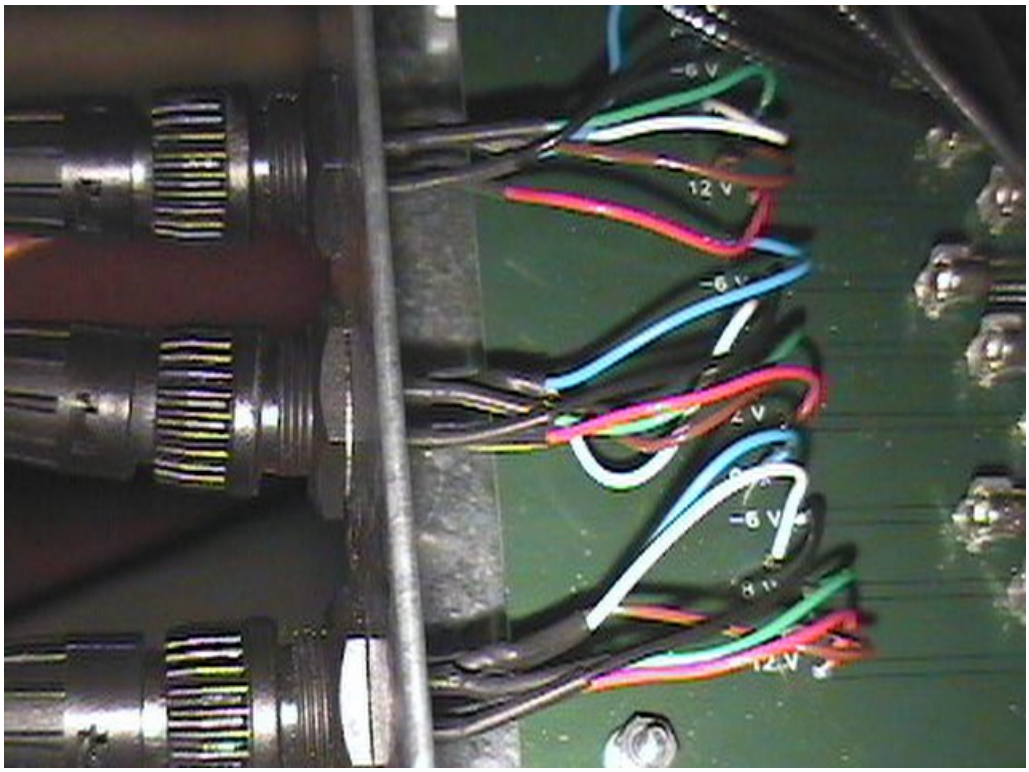

Figure 16: Fan-out connectors for output of low voltage to ICD drawers.

CONDUCTOR THICKNESS AND WIDTH

(For use in determining current carrying capacity and sizes of etched copper conductors for various temperature rises above ambient.)

Reference IPC-D-275
Superceded by IPC-2220,1,2,4 March 20, 1998

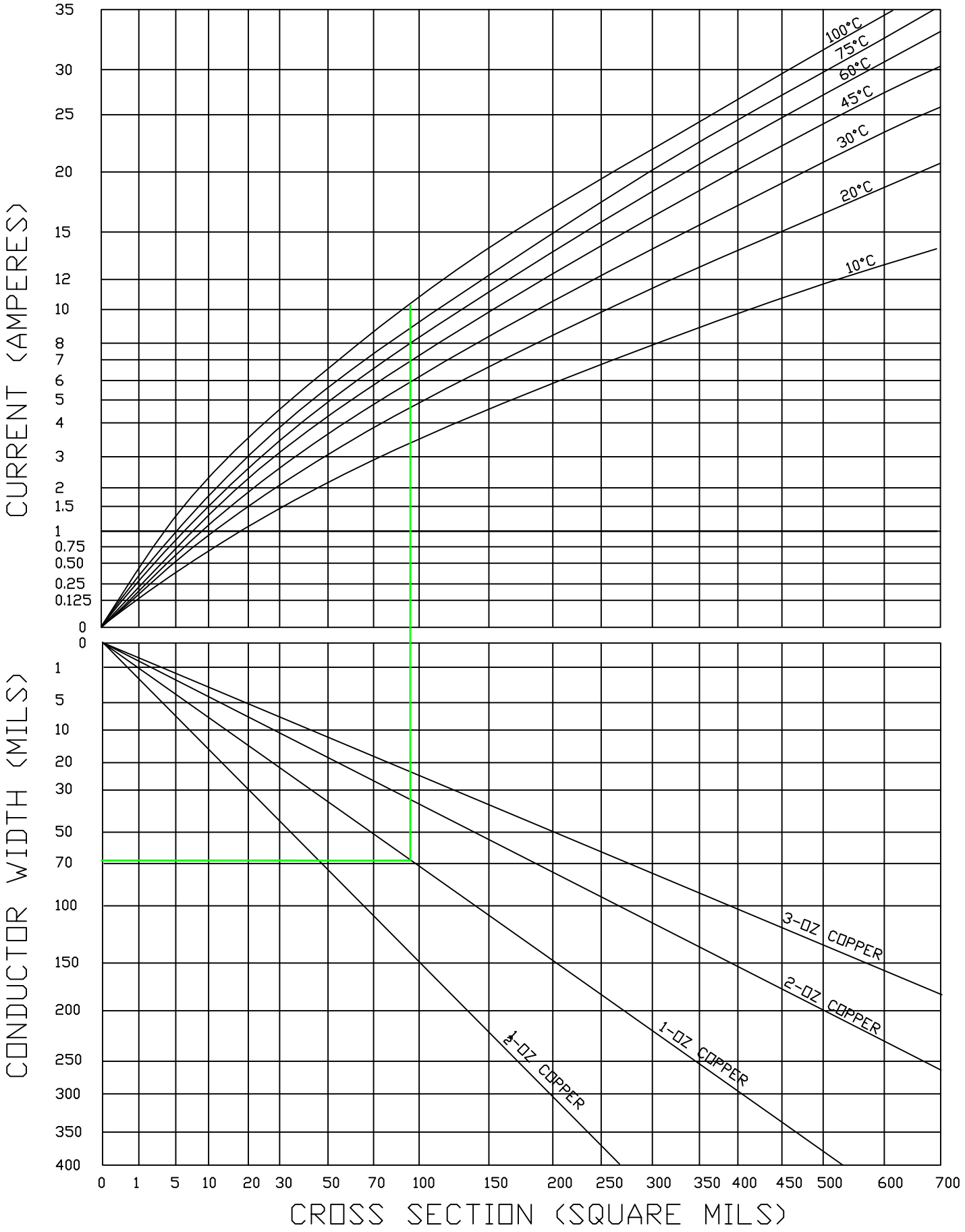

Output Connector

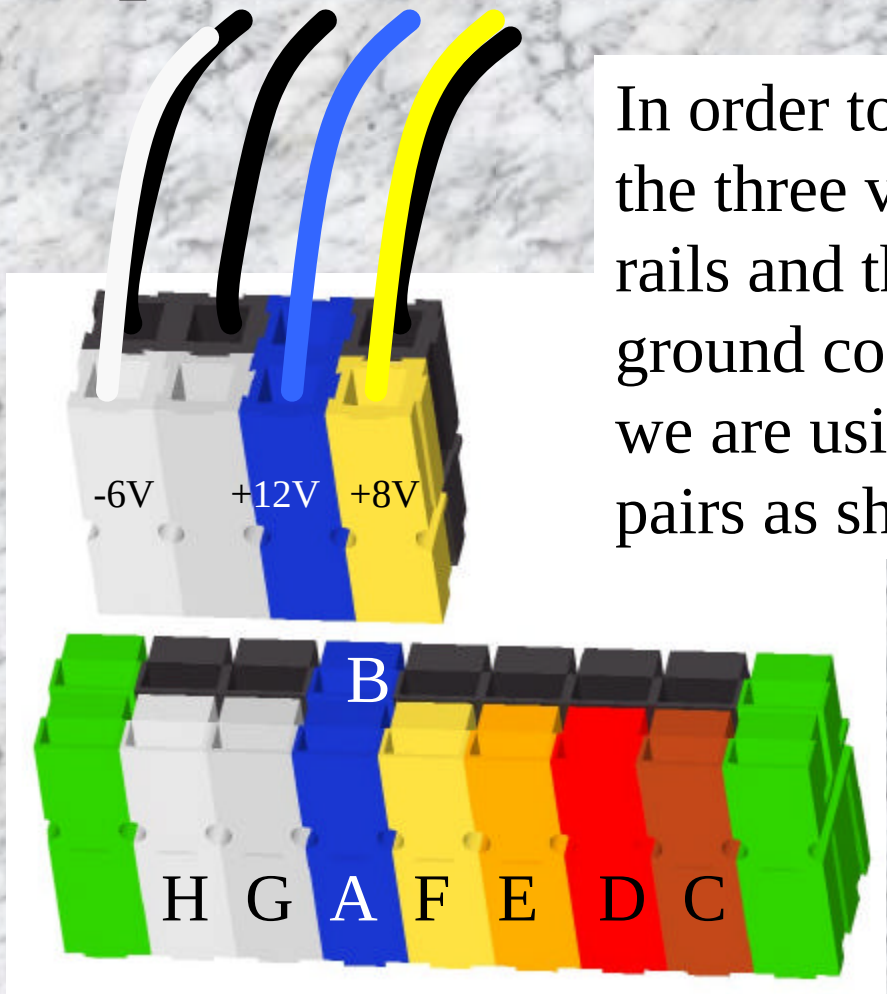

In order to pickup the three voltage rails and three ground connections we are using four (4) pairs as shown.

Personality Modules

- The values for the personality modules determines the current and voltage trip points.
- We set the levels for the +12, +8 and –6 volts to 13.3, 9.2 and 7.1 Volts at 7 Amps.

Module Layout & Resistor Values

+12V
POSITIVE
MODULE

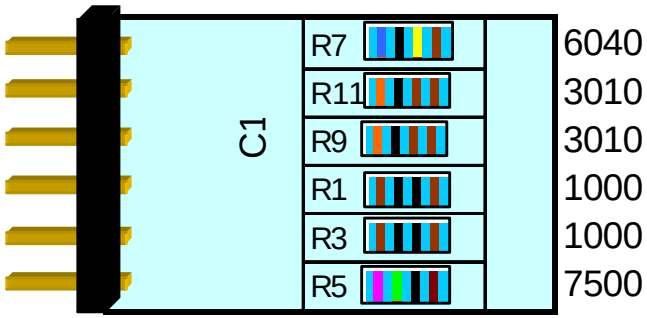

+8V
POSITIVE
MODULE

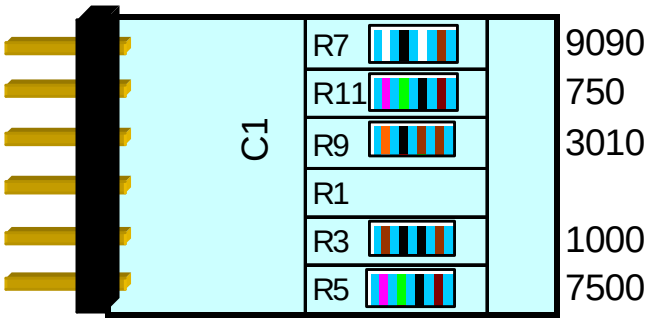
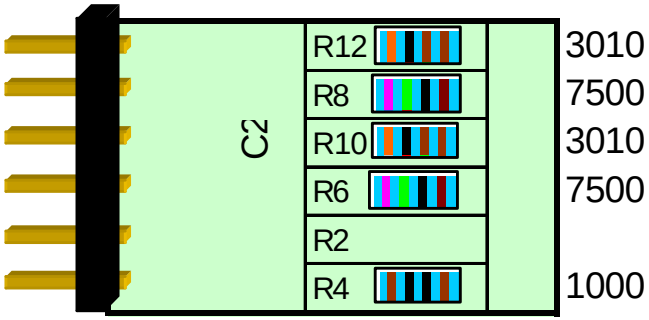
-6V
NEGATIVE
MODULE