Fermilab
PPD/EET
Infrastructure Group

MINOS Low Voltage Power Supplies

David L. Huffman

August 13, 2003

Master Crate Wiring Schematic

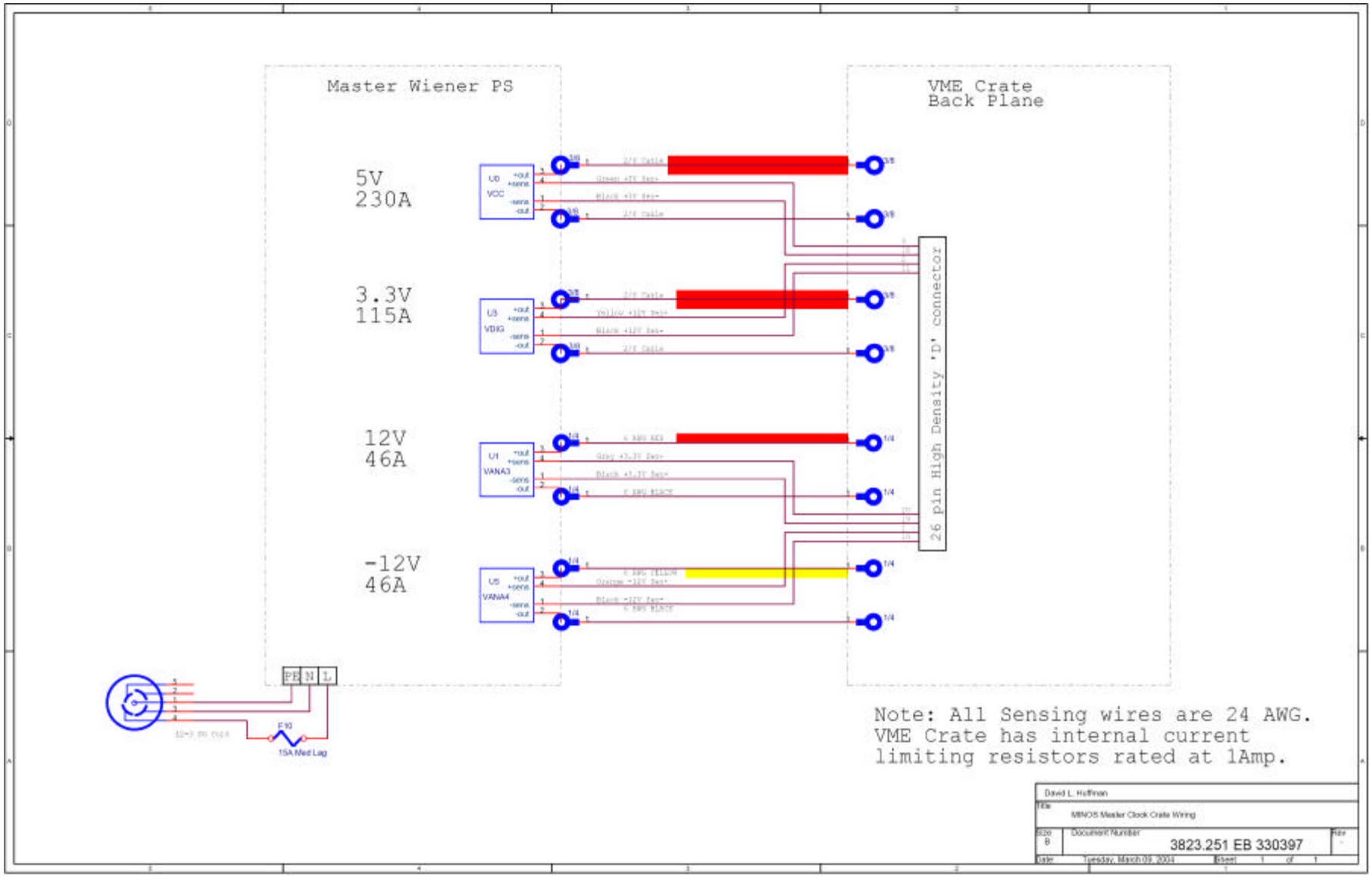

Sensing Lead PS Connections

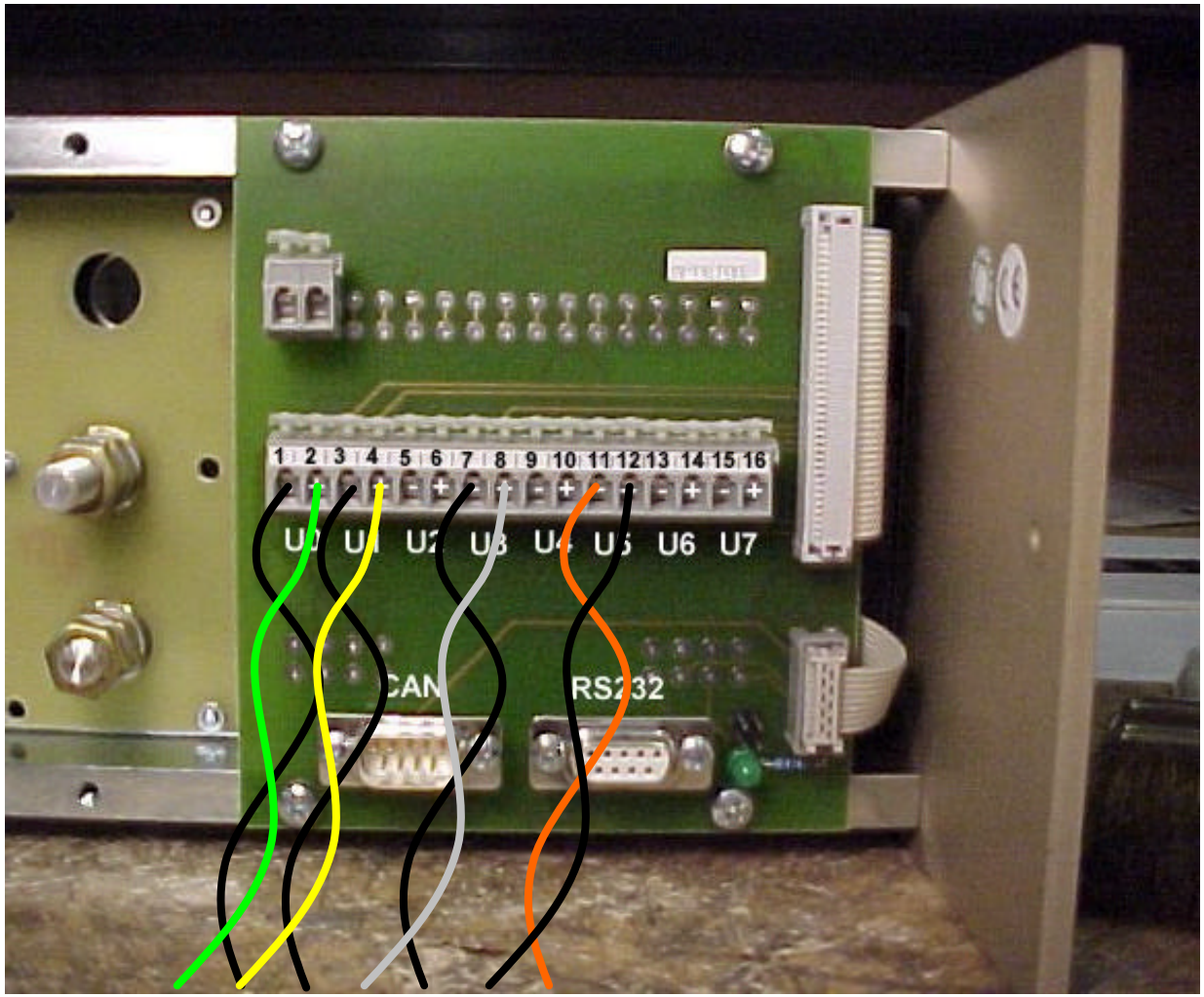

Sensing Lead PS Connections

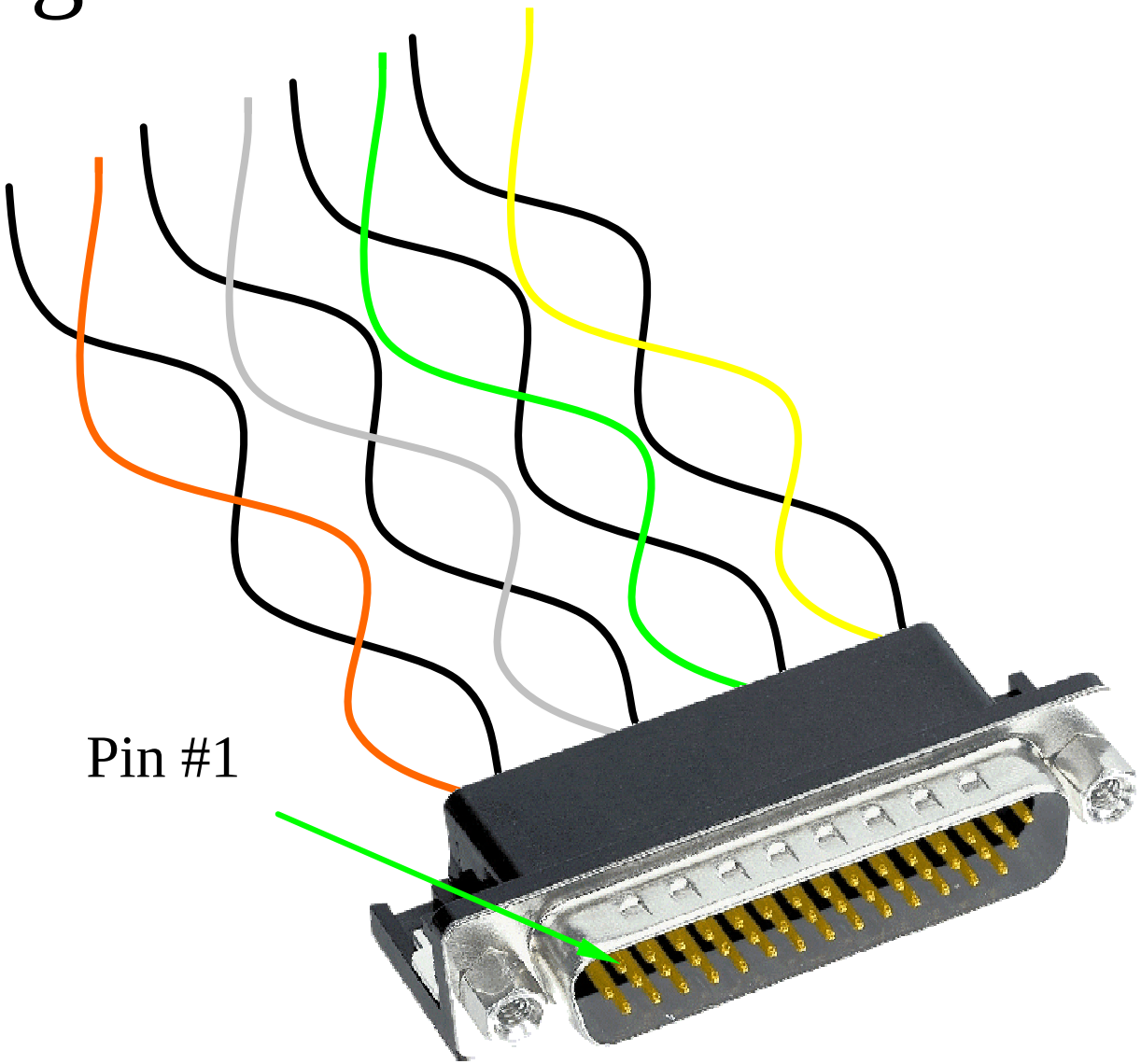

26 Pin Connector Pin-out

Voltage	Conn. pin	Sense block term.		
+5V supply	9	U0	2	Green
+5V return	18	U0	1	Black
+12V supply	2	U1	4	Yellow
+12V return	11	U1	3	Black
+3.3V supply	20	U3	8	Gray
+3.3V return	19	U3	7	Black
-12V supply	1	U5	11	Orange
-12V return	10	U5	12	Black

Wiener Output Labeling

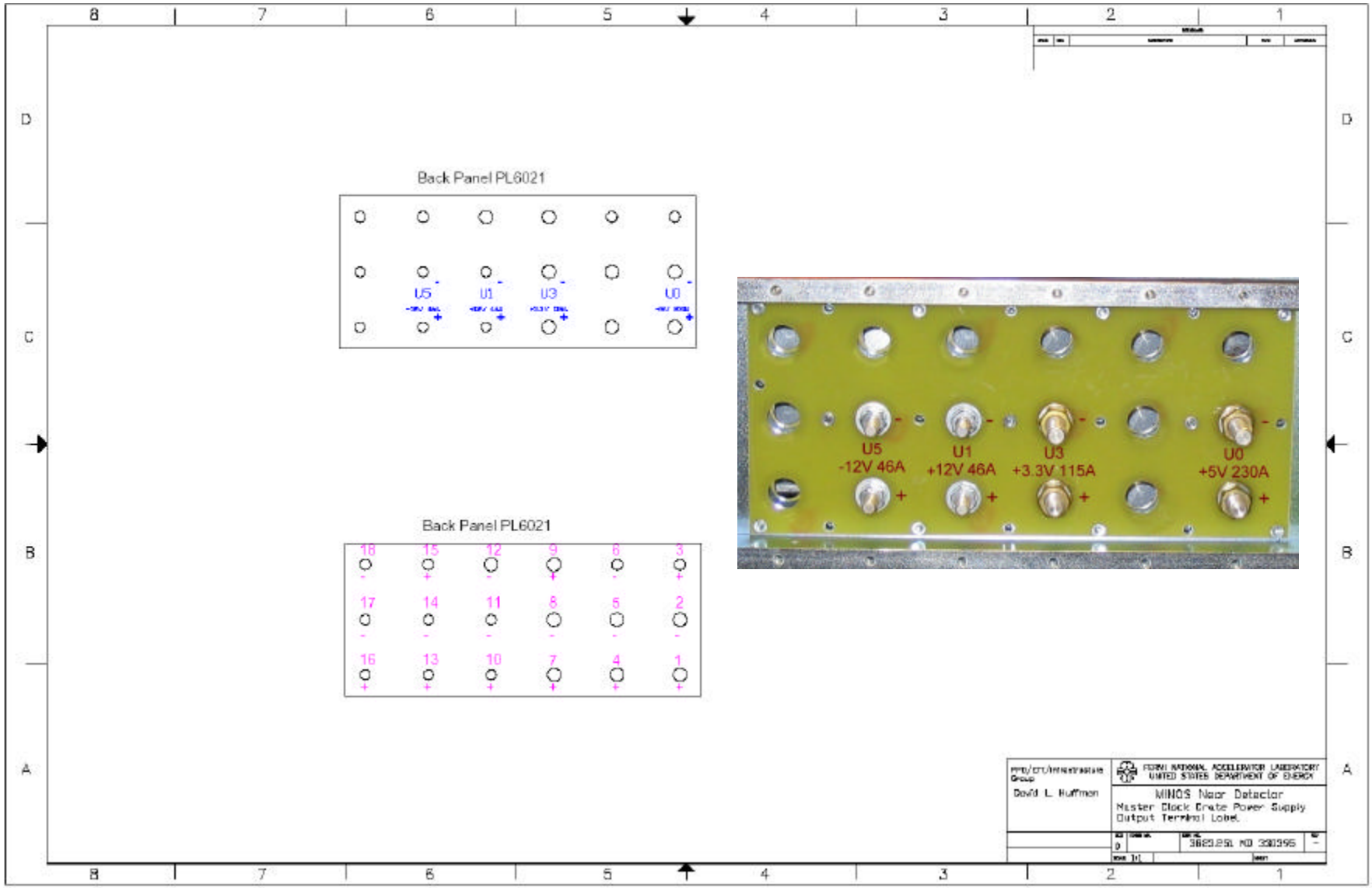

Wiener Modifications

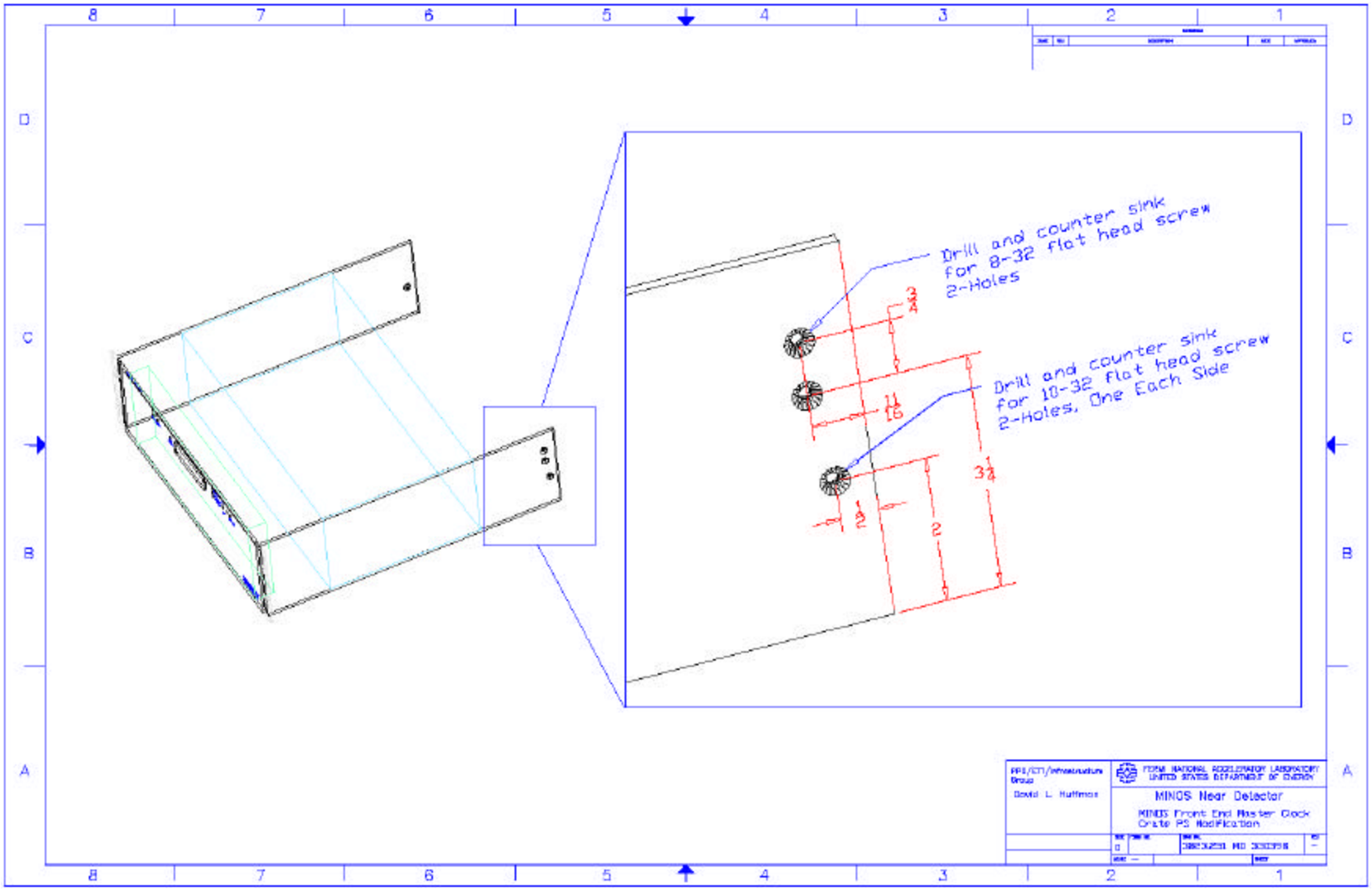

Protective Cover

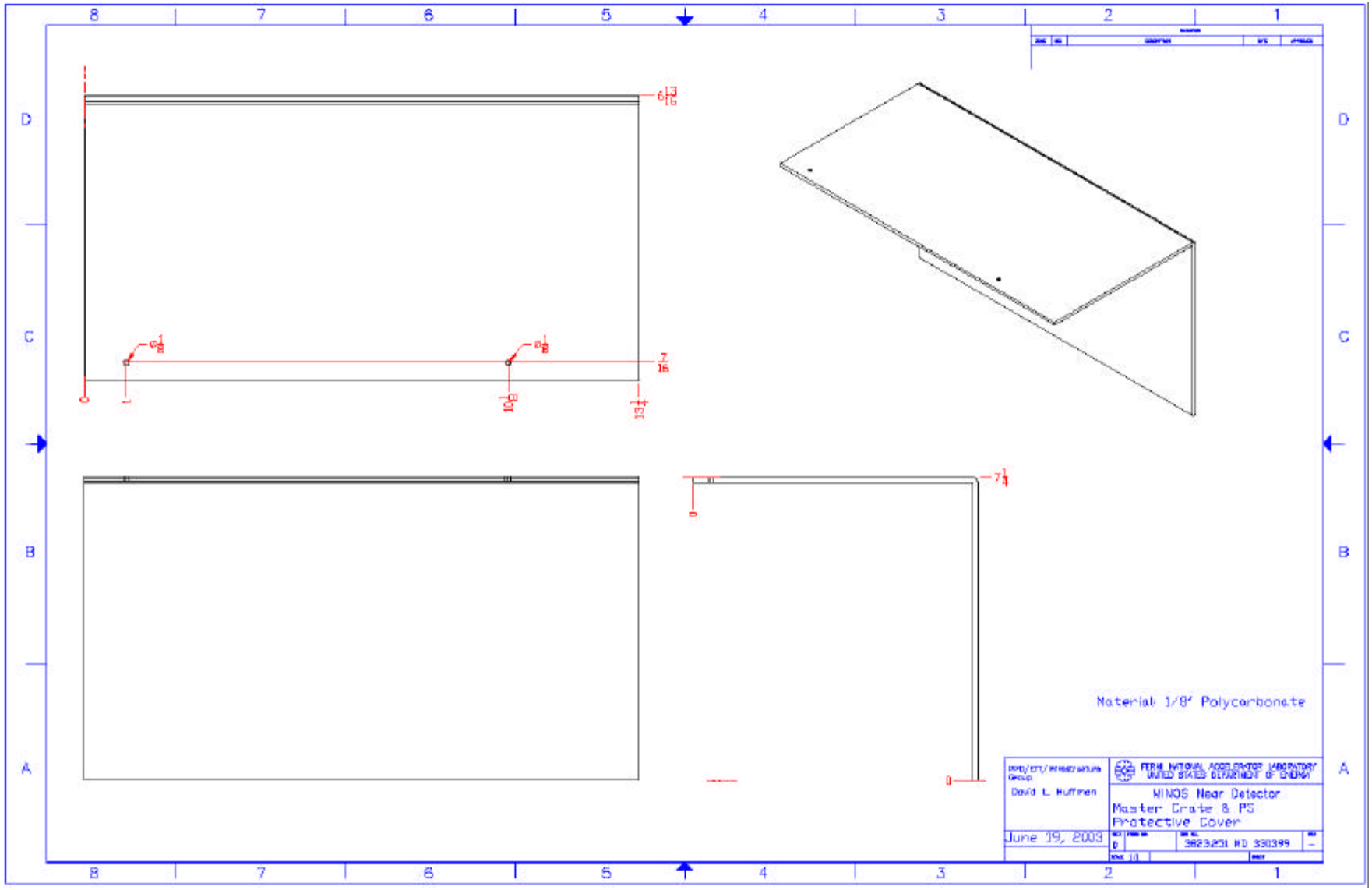
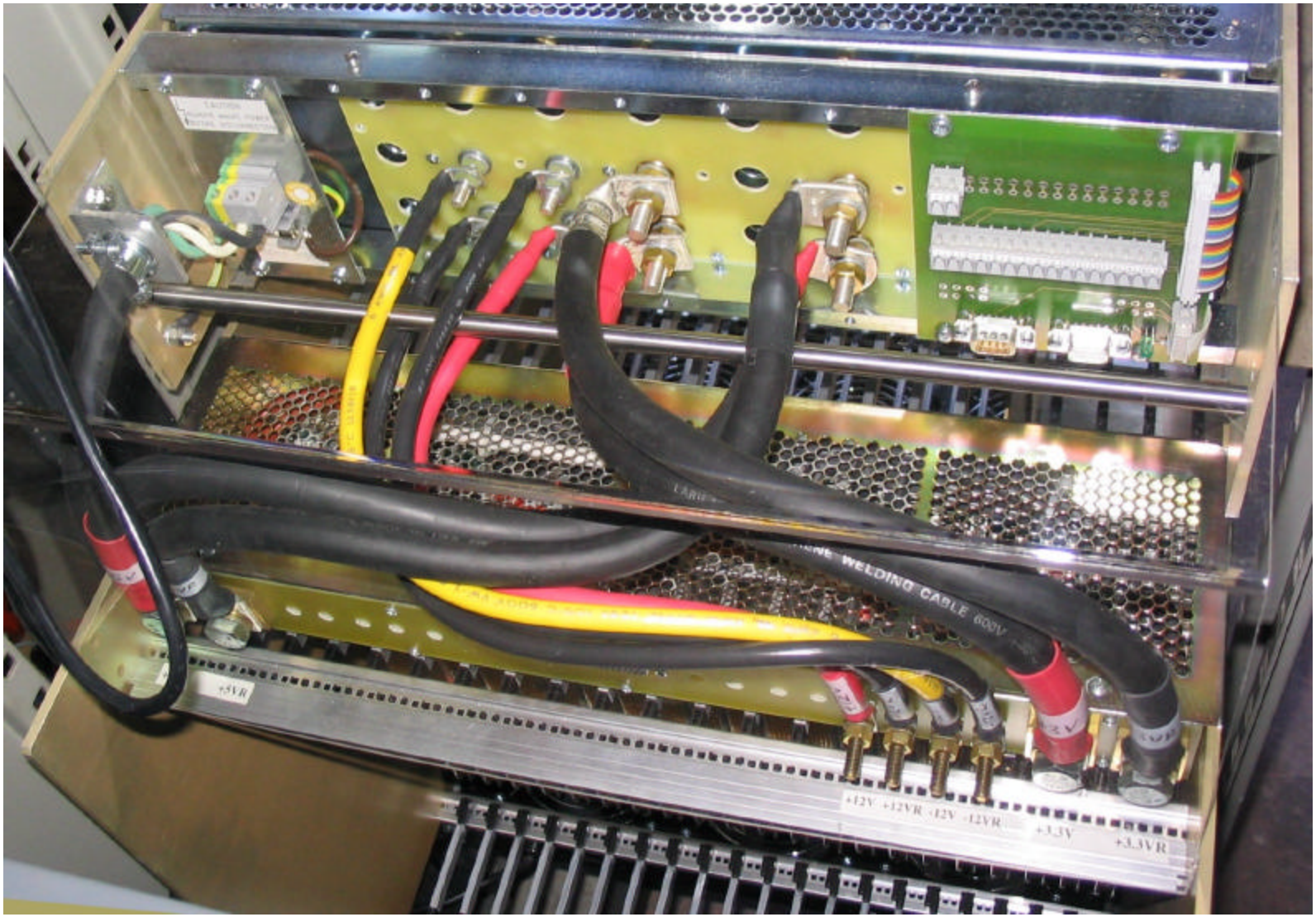
Picture of Completed Harness