RM Connections Temperature Sensors

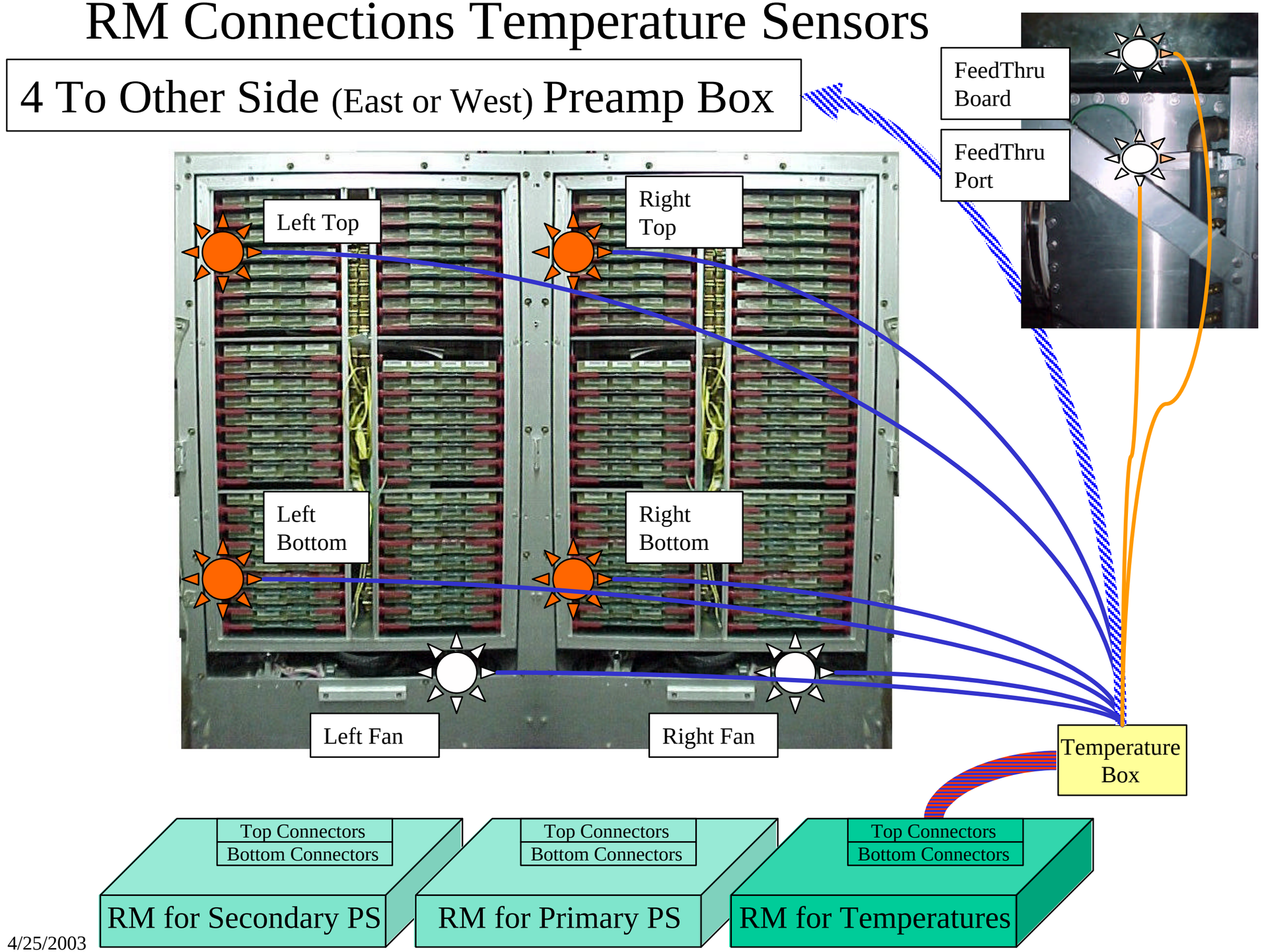

4/25/2003

PreampLayout2