REVISIONS				
ZONE	REV	DESCRIPTION	DATE	APPROVED

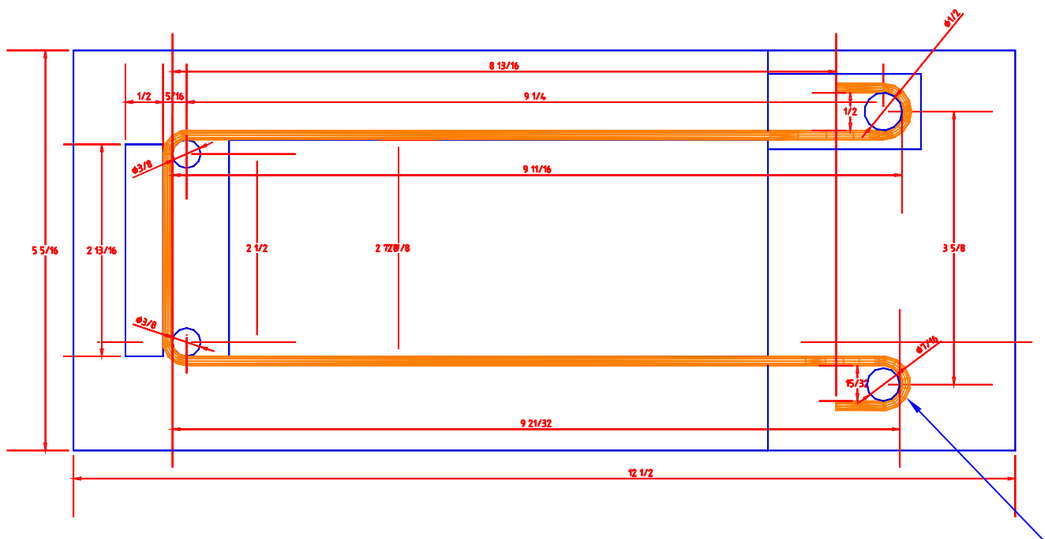

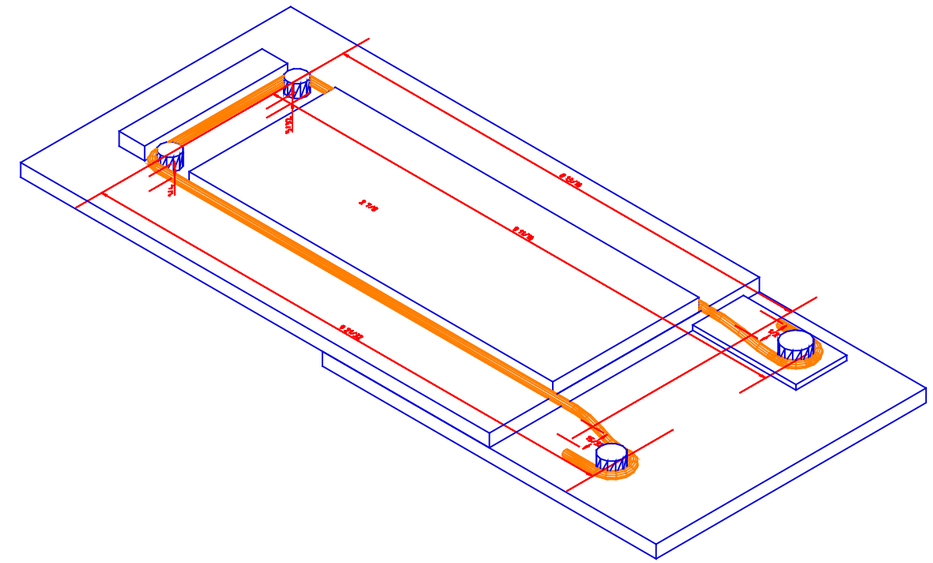

Copper tube is 25-1/8" long.
The end bends are done after
tube is inserted into the
power supply module and the
epoxy has cured.

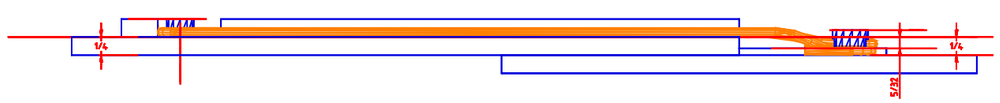

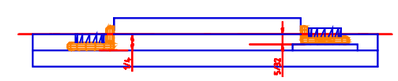

1/8" Copper Tubing

PPD/ETT/DO Electronics Group David L. Huffman	FERMI NATIONAL ACCELERATOR LABORATORY UNITED STATES DEPARTMENT OF ENERGY
	Calorimeter Electronics Upgrade Vicor Power Supply Mod. Cooling Tube Fixture & Assembly
03/11/99	SIZE D · FSCM NO. · DWG NO. 3823.121.MD-330265 · REV SCALE 1:1 · SHEET