REVISIONS				
ZONE	REV	DESCRIPTION	DATE	APPROVED

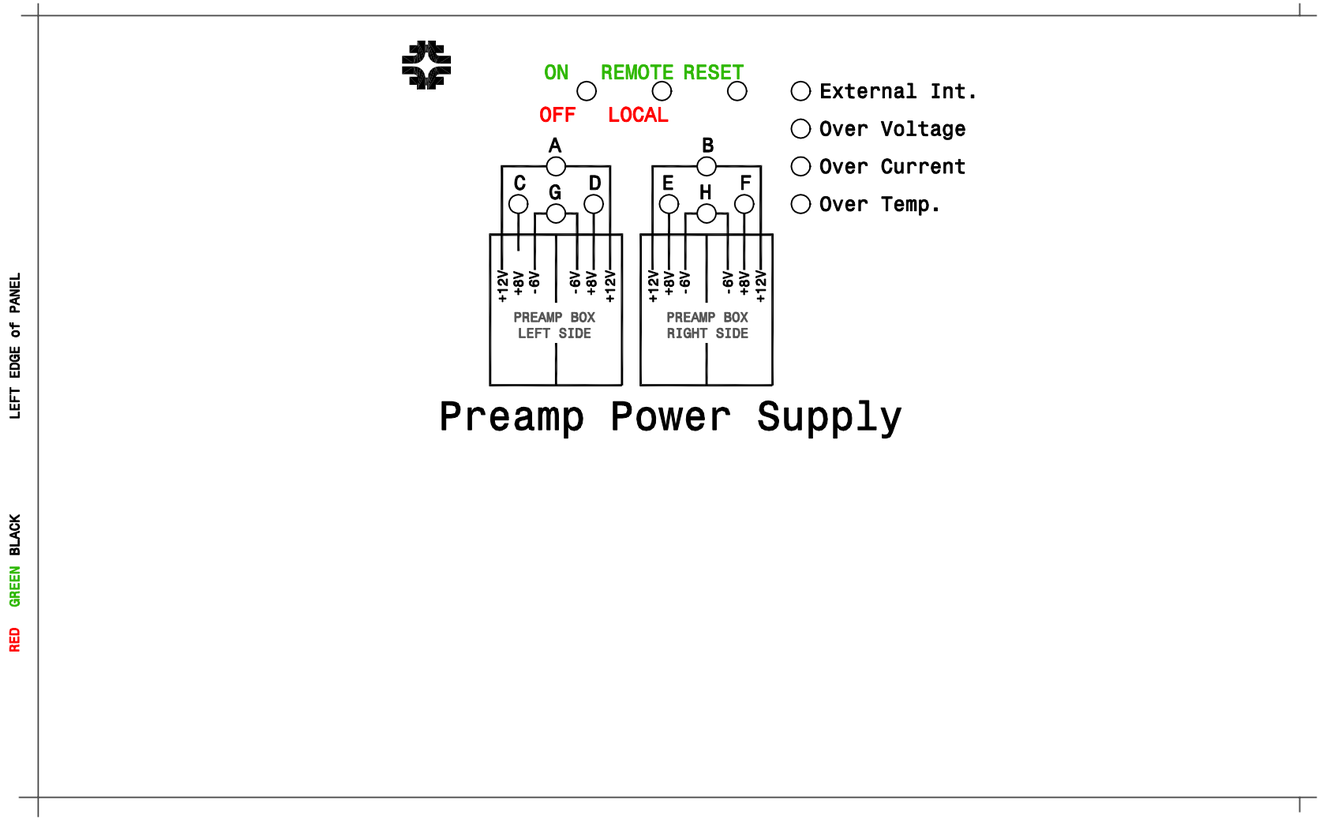

Preamp Power Supply

PPD/ETT/DO
Electronics Group
David L. Huffman

03/11/99

FERMI NATIONAL ACCELERATOR LABORATORY
UNITED STATES DEPARTMENT OF ENERGY

Calorimeter Electronics Upgrade
Preamp Power Supply
Front Panel Silk Screen

SIZE	FSCM NO.	DWG NO.	REV
D		3823.121.MD-330266	
SCALE 1:1		SHEET	