REVISIONS				
ZONE	REV	DESCRIPTION	DATE	APPROVED

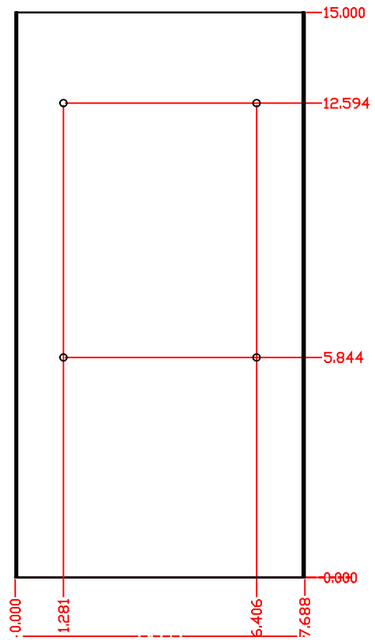

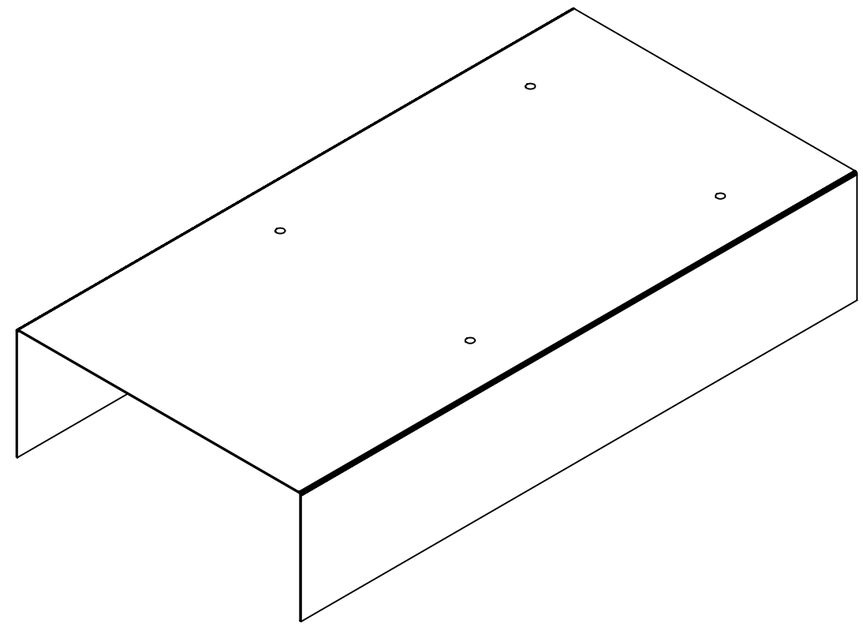

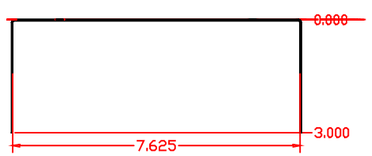

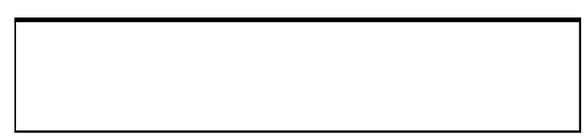

1/32" High Sat. Matl.

PPD/ETT/DO
Electronics Group
David L. Huffman

03/11/99

FERMI NATIONAL ACCELERATOR LABORATORY
UNITED STATES DEPARTMENT OF ENERGY

Calorimeter Electronics Upgrade
Preamp Power Supply
Magnetic Shield Top

SIZE	FSCM NO.	DWG NO.	REV
D		3823.121.MD-330269	

SCALE 2:1 SHEET