03/24/00

David Huffman
PPD/ETT/D0

Design for Preamp Power Supply Power Distribution

1. Increase AC power to Preamp Power Supplies. Hybrid power has increased approximately 3 times the Run I level.
2. Change the AC distribution chassis as needed to meet the new power level.
3. Change the DC power distribution to comply with NEC code.

Item 1:

Reference drawing number 3740.412-ED-286241. There will be two separate 208 VAC 3 phase inputs from the distribution panel. The wiring will be sized for 60 amp service although actual power will be less than this value. Two Power Distribution Chassis will be used, each powering half of the detector. (ref. 3740.412-ED-286115) This work requires new service in the power distribution panel.

Item 2:

The Power Distribution Chassis (3740.412-ED-286115) will be changed to allow 20Amp service out.

The Preamp Power Supply AC Distribution (3740.412-ED-286235) will have four of its breakers changed to 10 amps for the power supply outlets.

Item 3:

The DC power distribution wiring from the power supply will be changed to 10 AWG up to the point where the two power supplies interconnect. At this point there will be a fuse block that redistributes the power to fused cabling designed to protect the remaining wire runs.
(ref. 3740.421-ED-286241) All cable ties will be removed to allow for additional radiant heat loss.

Additional information
Bench tests of the existing wiring harnesses has shown the following:
The original harness that uses 18 x 12 AWG wires was operated with 25 amps conducted on each wire. The harness was left bundled with cable ties as it was used during Run I. The maximum temperature recorded during this test was in the center of the bundle and measured 90degC. This test shows a condition than cannot occur with the power supply we are using. All conductors could never be operated at 25 amps simultaneously. The maximum current available from the supply is 48+100+60 amps or 208amps. If all source conductors were running at the rating of the supply, the conductors would have these magnitudes. Two conductors off the 48amp output each at 24amp, four conductor off the 100amp output at 25amps each and two conductors off the 60amps output at 30amps each. If any one conductor draws more than these stated currents the other conductors will have a lower value and the offending wire will clear the fuse. Since the return wiring has 10 conductors their currents will be less. We will fuse 6 of the conductors at 25amps and two at 30 amps to meet this design. An additional test was preformed with a bundle of 18 x 10 AWG and was allowed to carry 30 amps on each wire. This assembly reached a steady state temperature of 90degC. All wire is VW-1 fire rated and 105degC. Using the new harness will put the wiring below the temperature rating under any condition.

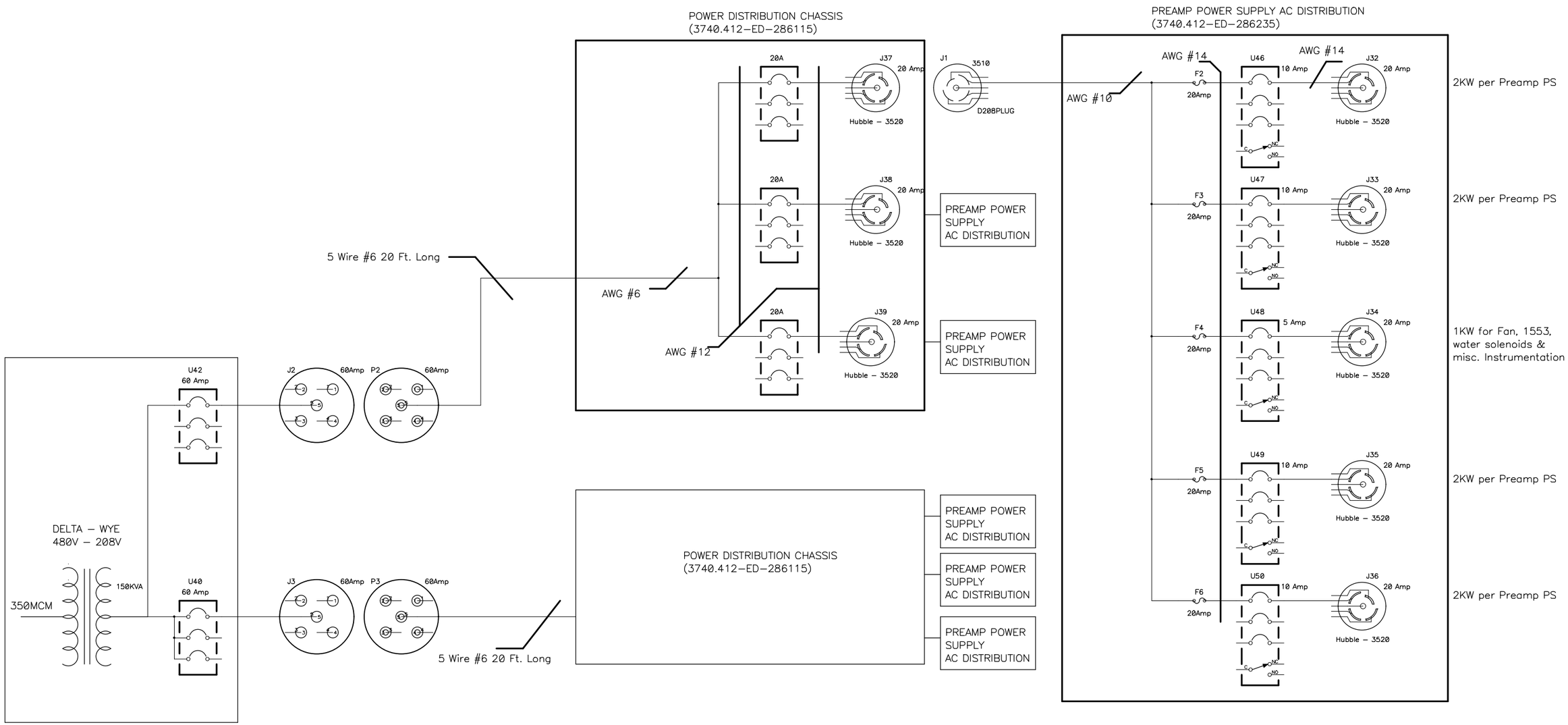

Title	09:18:07 Fri Mar 24 2000 PREAMP AC DISTRIBUTION	
Size D	Number 3740.412-ED-286241	Rev E
Date March 3, 2000		David L. Huffman
Filename ed286241a.SCH		Sheet 1 of 1

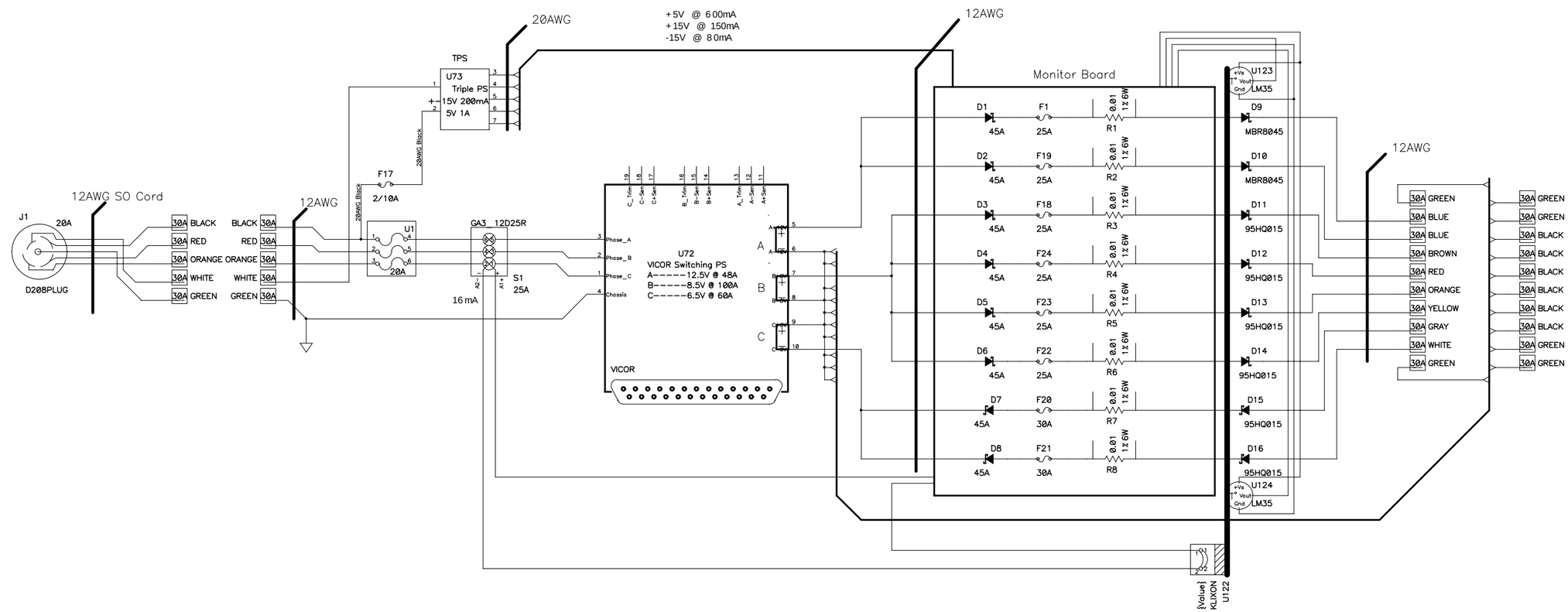

Title	15:03:47 Wed Feb 06 2002 Preamp Power Dist. LineDrawing	
Size D	Number 3740.412-ED-286241	Rev B
Date March 6, 2000		David L. Huffman
Filenamepwrlinedwg.SCH		Sheet 2 of 2

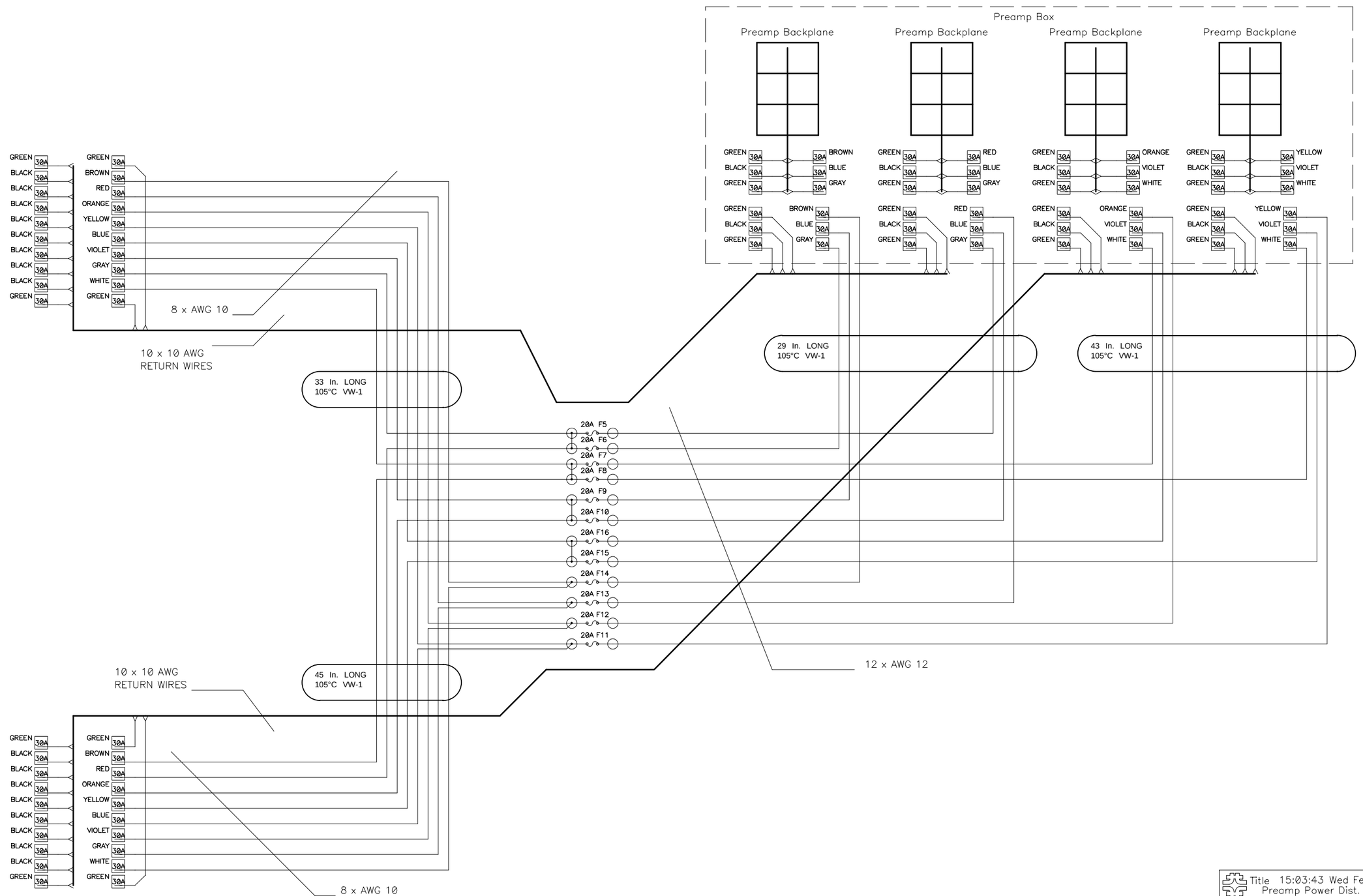

Title	15:03:43 Wed Feb 06 2002 Preamp Power Dist. LineDrawing	
Size D	Number 3740.412-ED-286241	Rev B
Date March 6, 2000		David L. Huffman
Filenamepwrlinedwg.SCH		Sheet 1 of 2

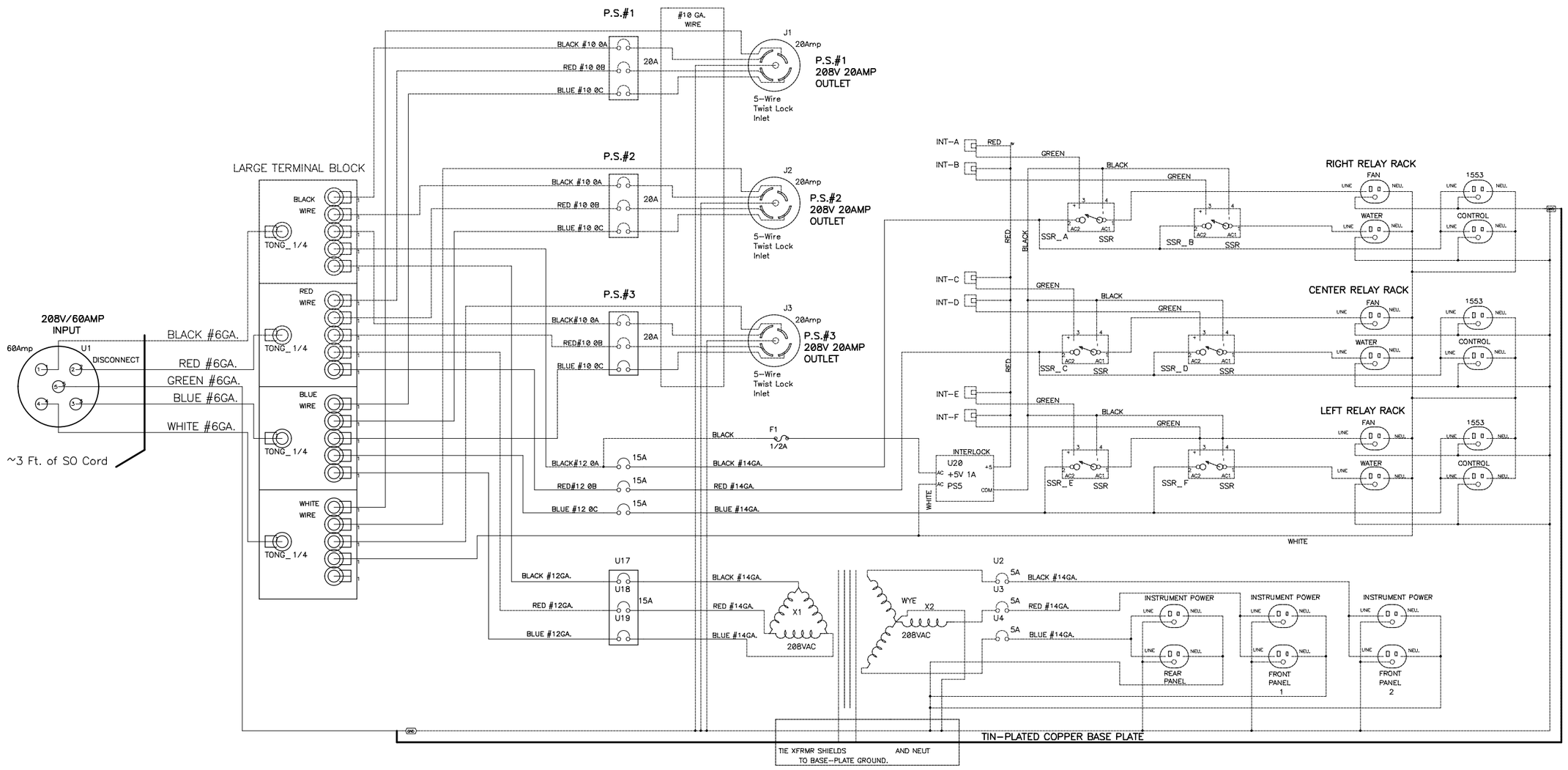

Title 09:30:52 Fri Mar 24 2000 POWER DISTRIBUTION CHASSIS		
Size D	Number 3740.412-ED-286115	Rev D
Date March 1, 2000	David L. Huffman	
Filename ed286115.SCH	Sheet of 1	

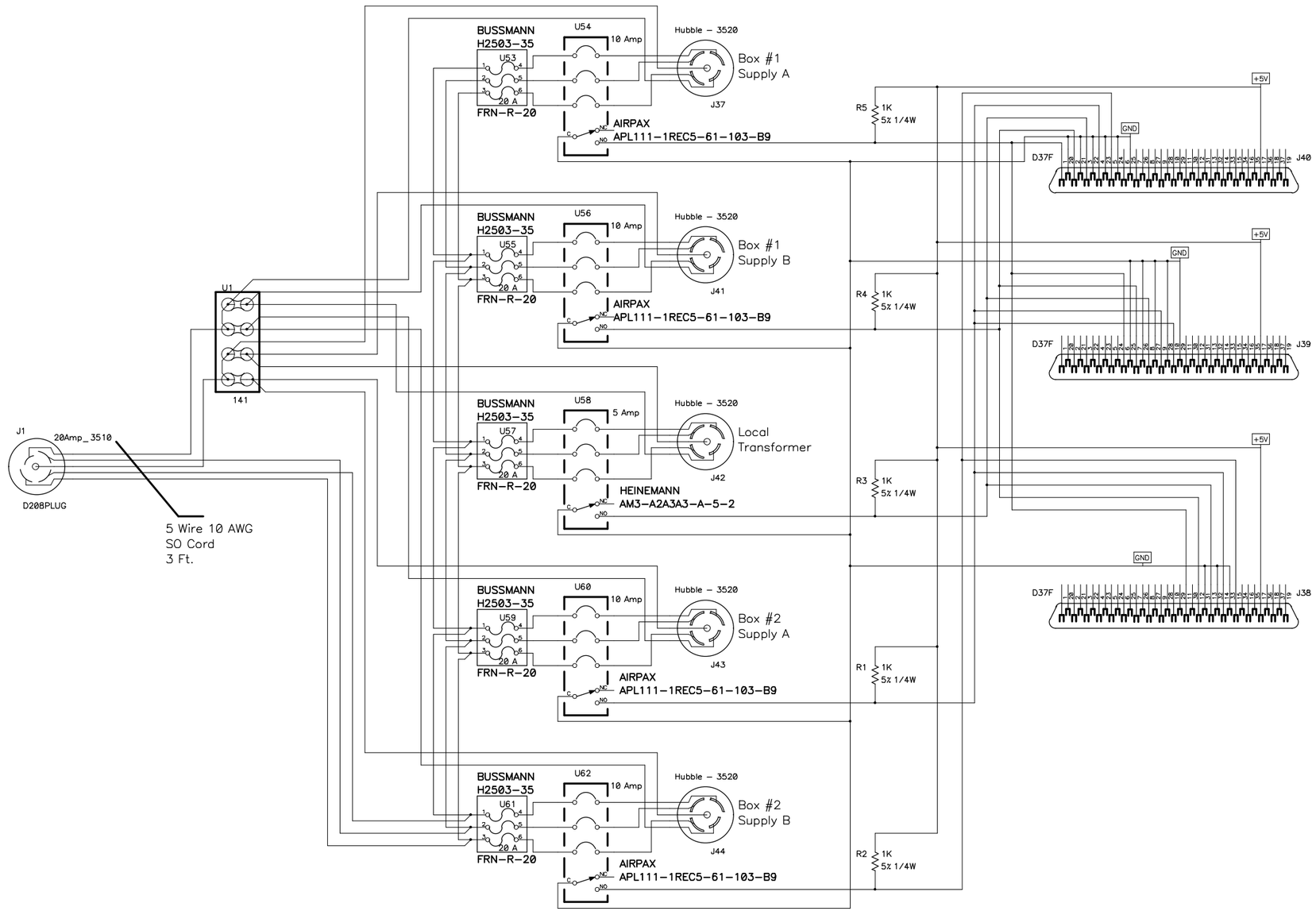

NOTE 1: All Wiring is 14 AWG unless
Specified Differently.

Title 09:16:03 Fri Mar 24 2000 Preamp PS AC Distribution		
Size D	Number 3740.412-ED-286235	Rev D
Date March 1, 2000	David L. Huffman	
Filename ed286235.SCH	Sheet 1 of 1	