DWG. NO.	SH.	REV

REVISIONS 09/08/99 09:44:44

REV	DESCRIPTION	DATE	APPROVED

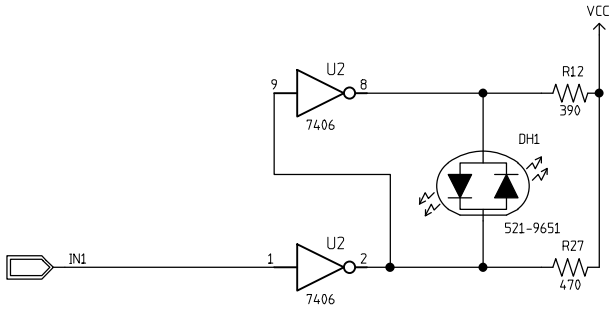

CONTRACT NO.		
APPROVALS	DATE	
DRAWN		
CHECKED		
ISSUED		
		SIZE B · FSCM NO. · DWG. NO. · REV
		SCALE · SHEET 01

H=2LA; V=2LA