DWG. NO.	SH.	REV

REVISIONS 04/17/2002 03:04:27 PM

REV	DESCRIPTION	DATE	APPROVED

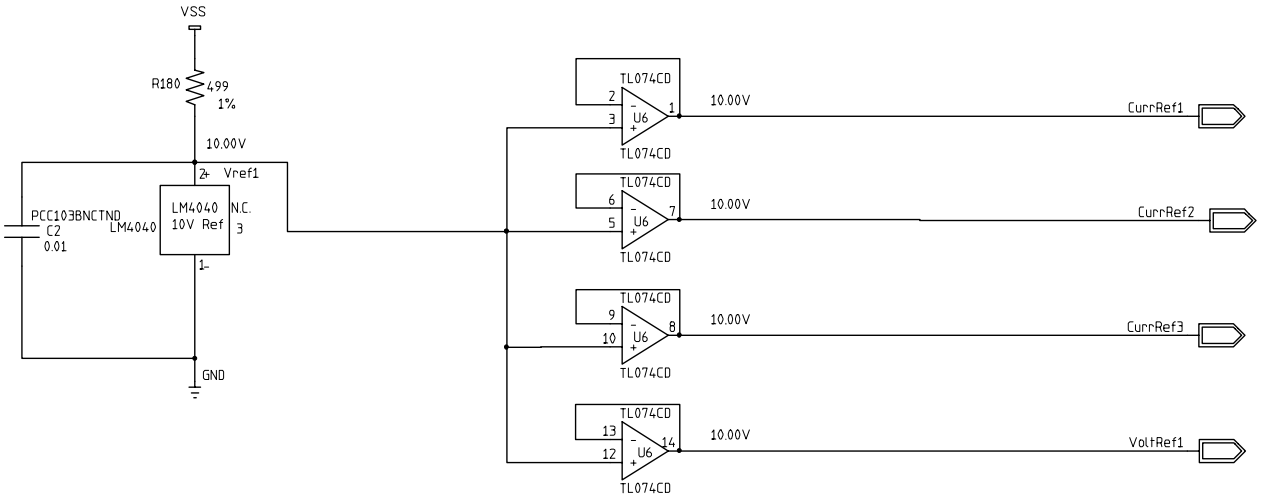

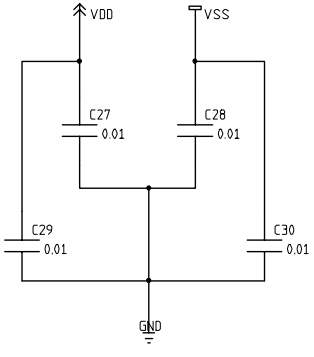

CONTRACT NO.		
APPROVALS	DATE	Calorimeter Upgrade Preamp Power Supply Monitor Board Hall Sensor
DRAWN		
CHECKED	99-09-28	
ISSUED		

SIZE	FSCM NO.	DWG. NO.	REV
B		3823.121.EB-330274	
SCALE		SHEET 01	

H=2LA; V=2LA