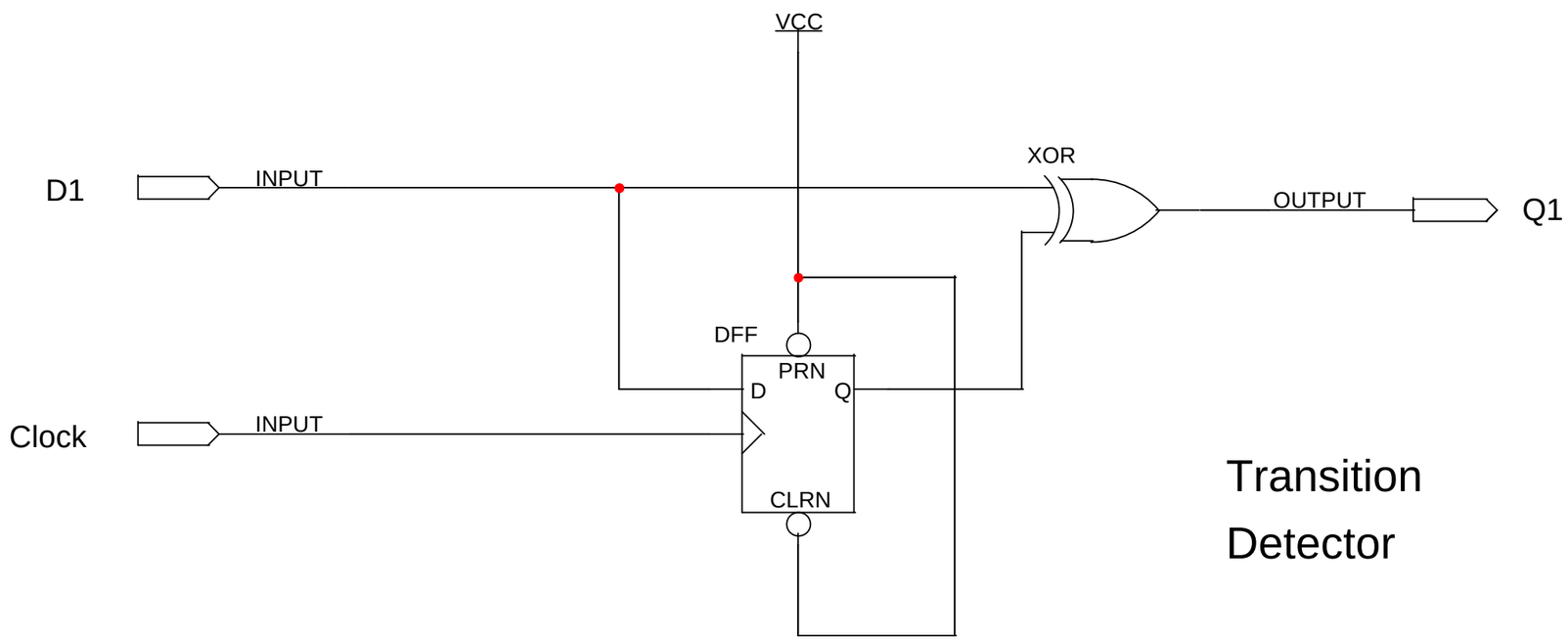

Transition
Detector