DWG. NO.	SH.	REV

REVISIONS

REV	DESCRIPTION	DATE	APPROVED

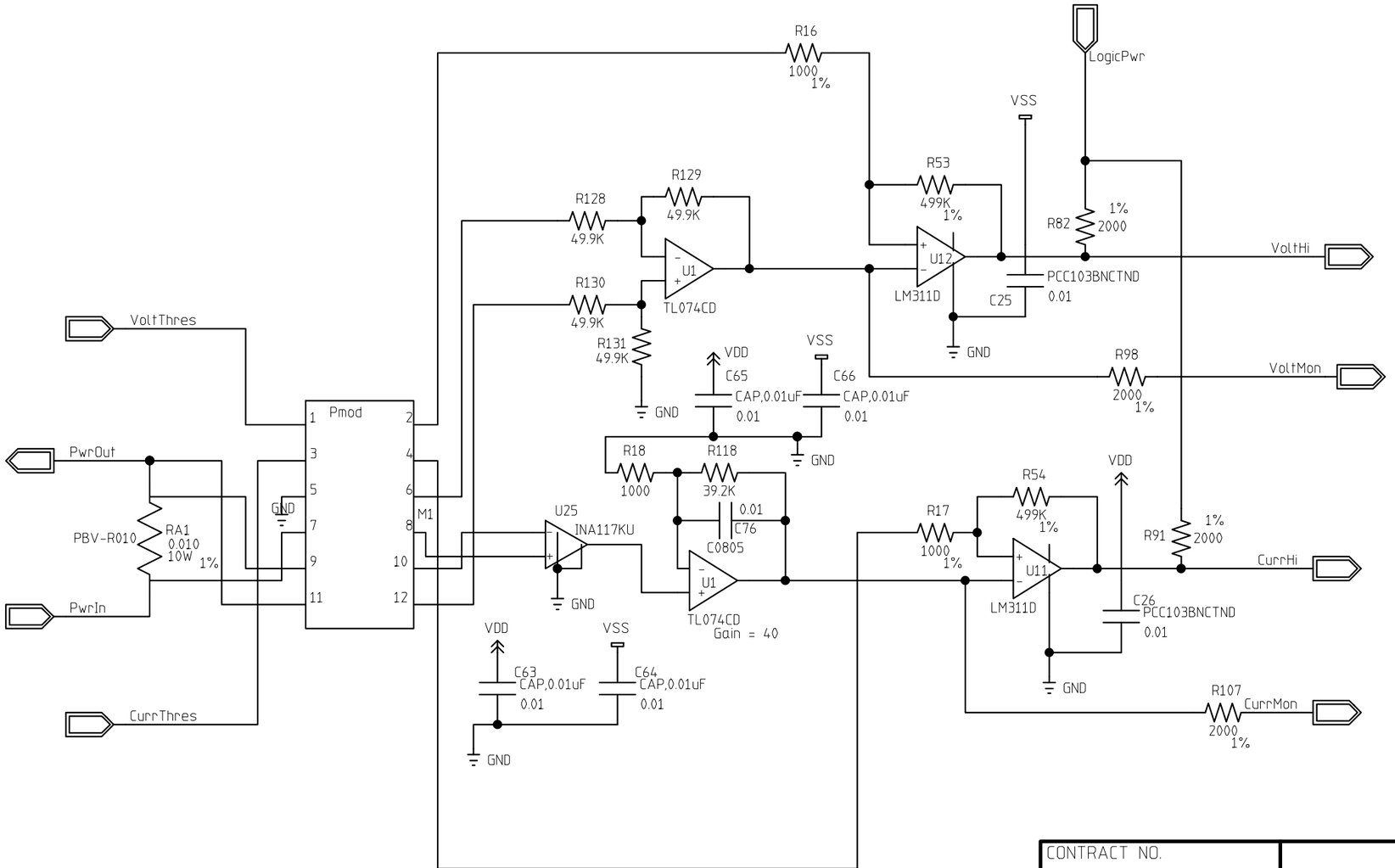

CONTRACT NO.	
APPROVALS	DATE
DRAWN	5-14-98
CHECKED	
ISSUED	

Calorimeter Upgrade
Preamp Power Supply
Window Monitor

SIZE	FSCM NO.	DWG. NO.	REV
B		3823.121.EB-330276	
SCALE		SHEET 01	

H=2LA; V=2LA