DWG. NO.	SH.	REV

REVISIONS

REV	DESCRIPTION	DATE	APPROVED

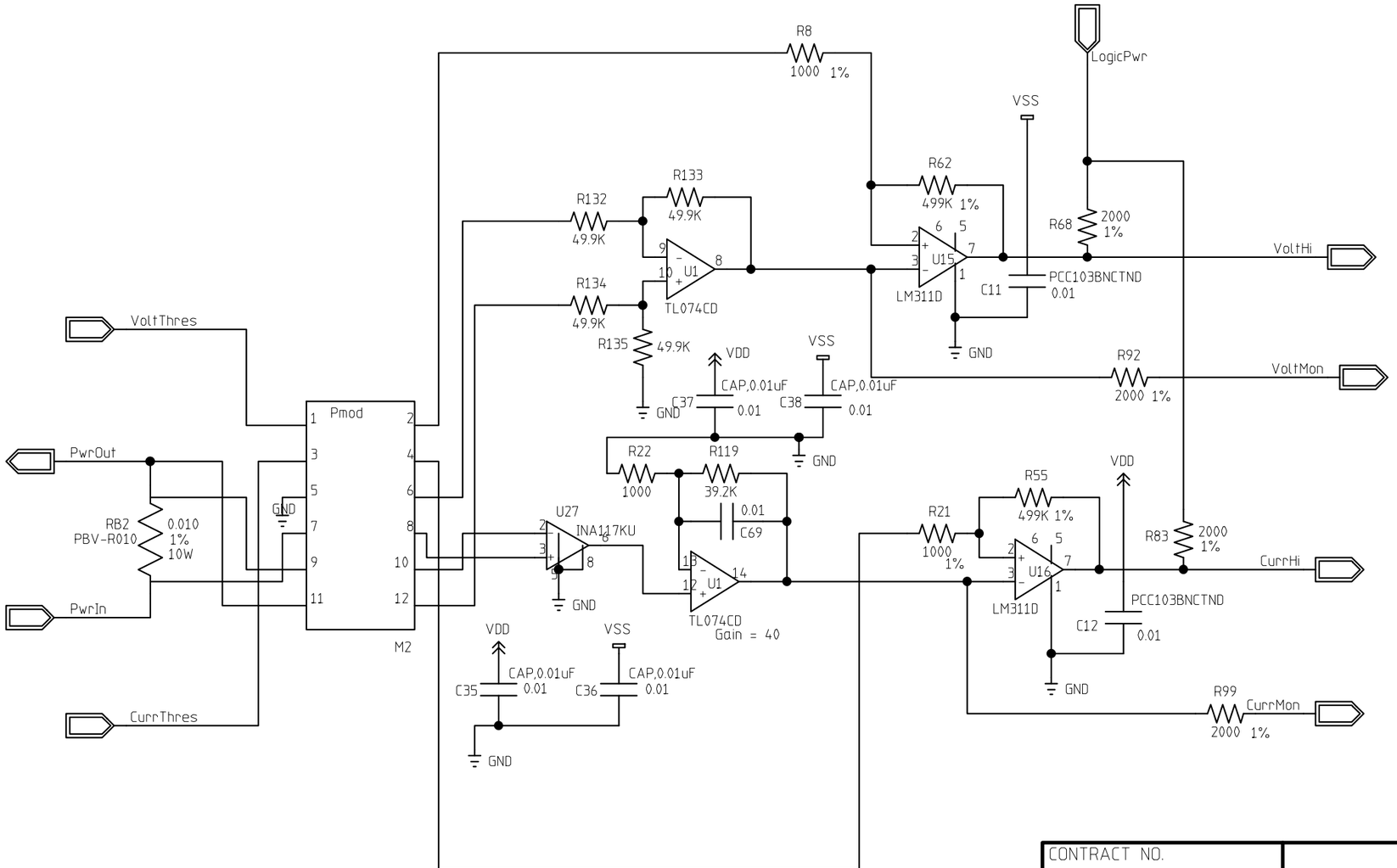

CONTRACT NO.		Calorimeter Upgrade Preamp Power Supply Window Monitor			
APPROVALS	DATE				
DRAWN	5-14-98				
CHECKED		SIZE B	FSCM NO.	DWG. NO. 3823.121.EB-330276	REV
ISSUED		SCALE		SHEET 01	PAGE 02

H=2LA; V=2LA