| DWG. NO. | SH. | REV |
|---|---|---|
| | | |

REVISIONS

| REV | DESCRIPTION | DATE | APPROVED |
|---|---|---|---|
| | | | |

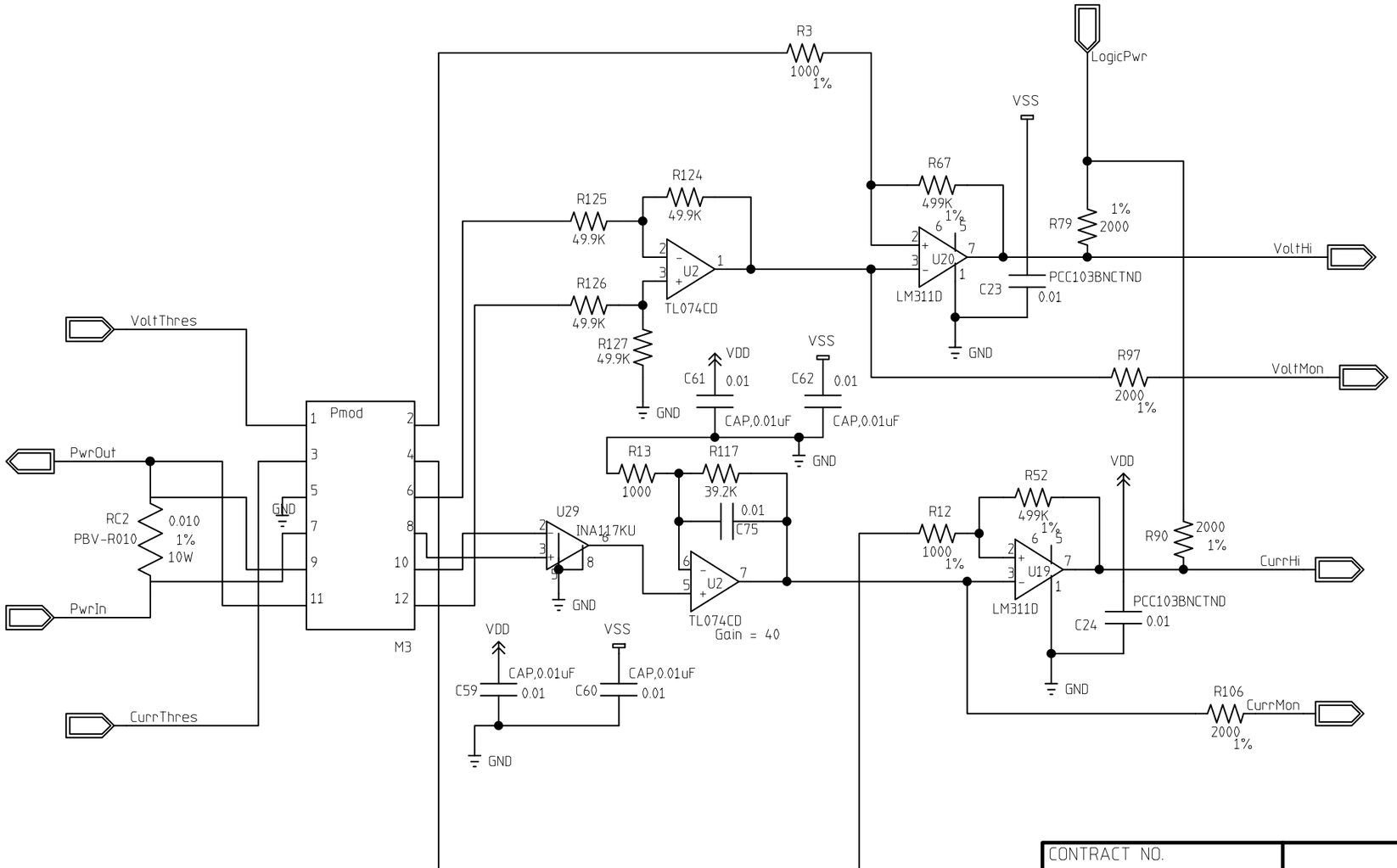


| CONTRACT NO. | | Calorimeter Upgrade Preamp Power Supply Window Monitor | | | |
|---|---|---|---|---|---|
| APPROVALS | DATE | | | | |
| DRAWN | 5-14-98 | | | | |
| CHECKED | | SIZE B | FSCM NO. | DWG. NO. 3823.121.EB-330276 | REV |
| ISSUED | | SCALE | | SHEET 01 | PAGE 03 |

H=2LA; V=2LA