DWG. NO.	SH.	REV

REVISIONS 02/02/01 10:41:18

REV	DESCRIPTION	DATE	APPROVED

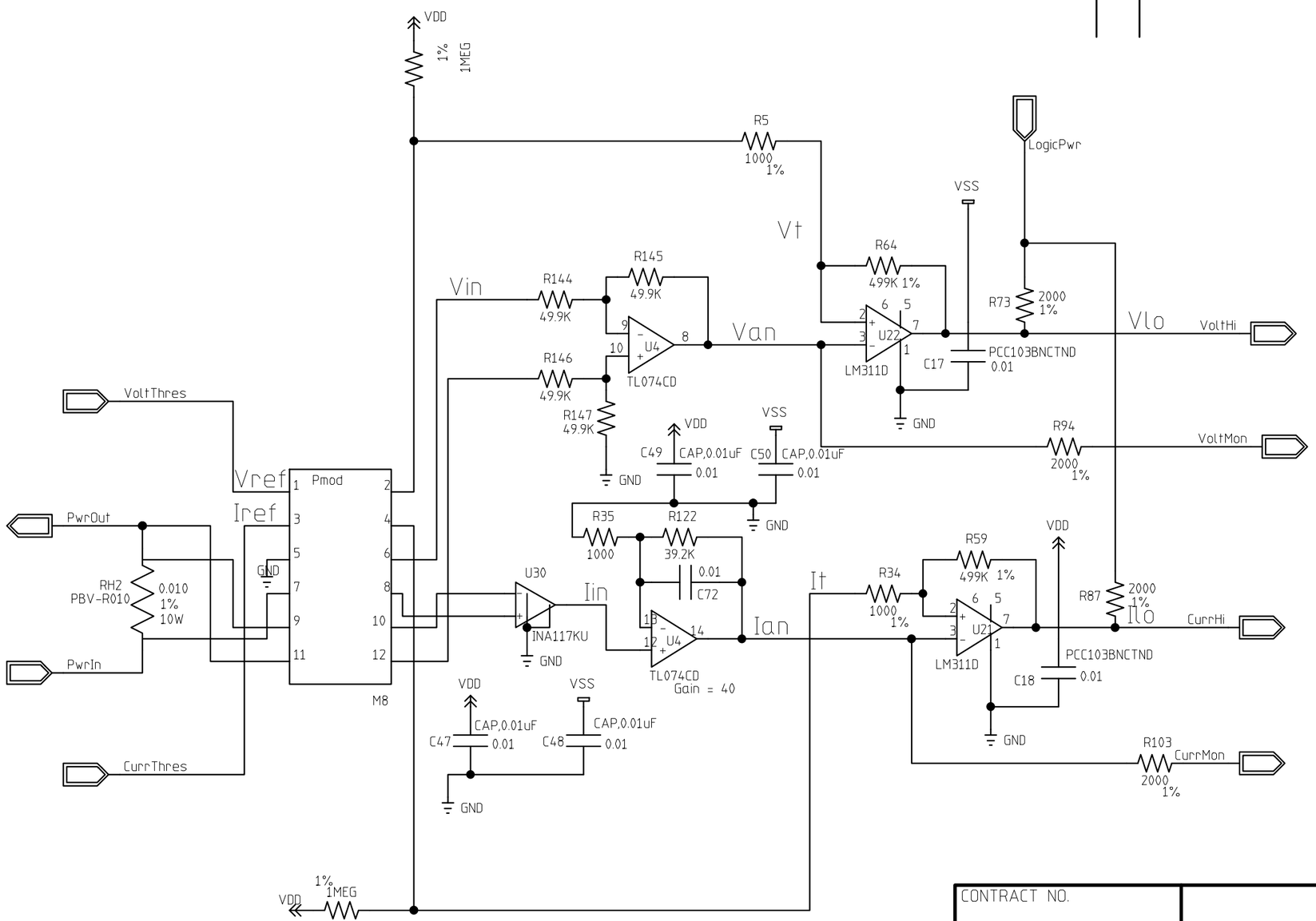

CONTRACT NO.	
APPROVALS	DATE
DRAWN	
CHECKED	99-09-28
ISSUED	

SIZE	FSCM NO.	DWG. NO.	REV
B		3823.121.EB-330276	
SCALE		SHEET 01	PAGE 08

H=2LA; V=2LA