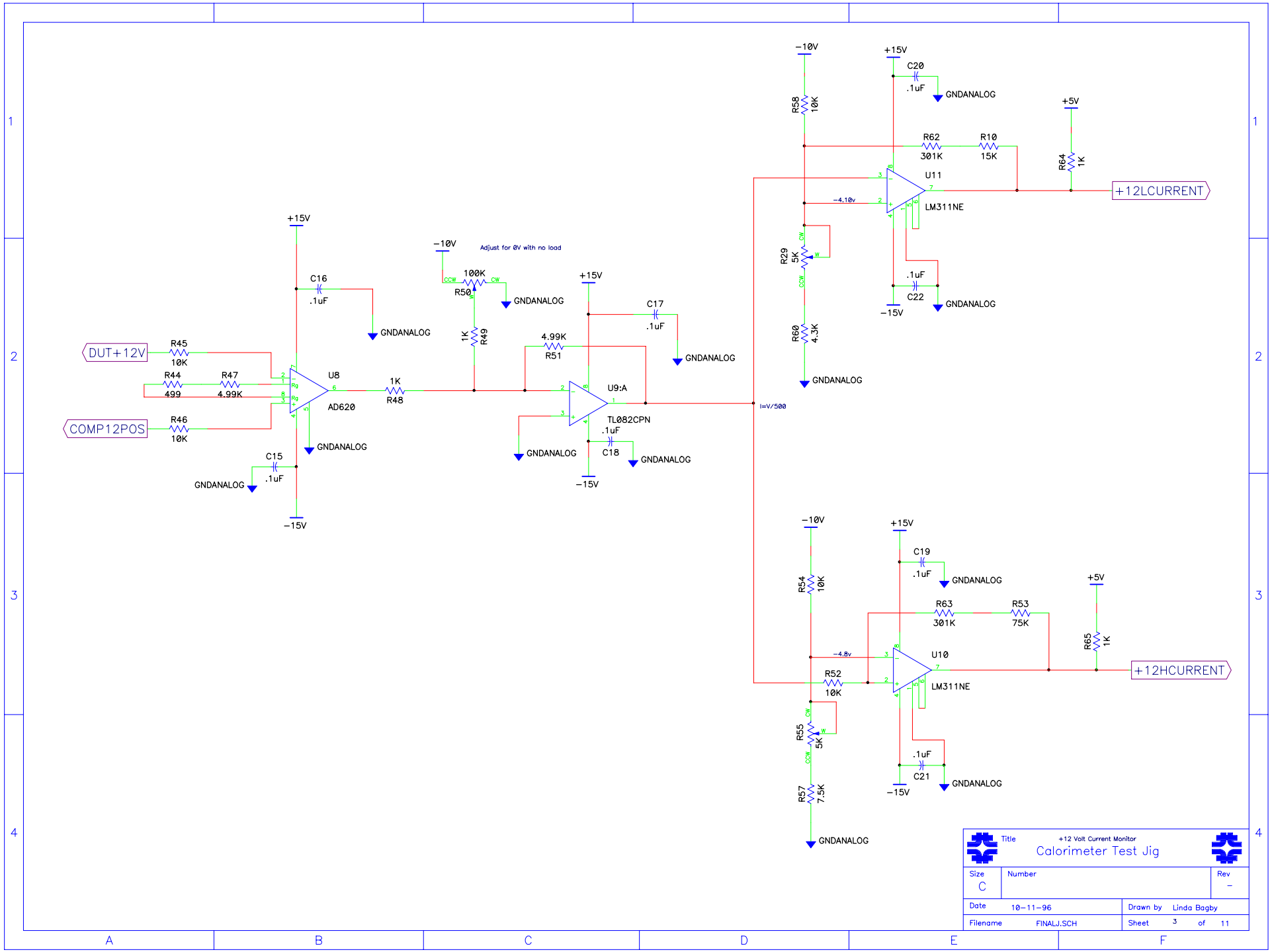

Title	+12 Volt Current Monitor Calorimeter Test Jig	
Size C	Number	Rev -
Date 10-11-96		Drawn by Linda Bagby
Filename FINALJ.SCH		Sheet 3 of 11