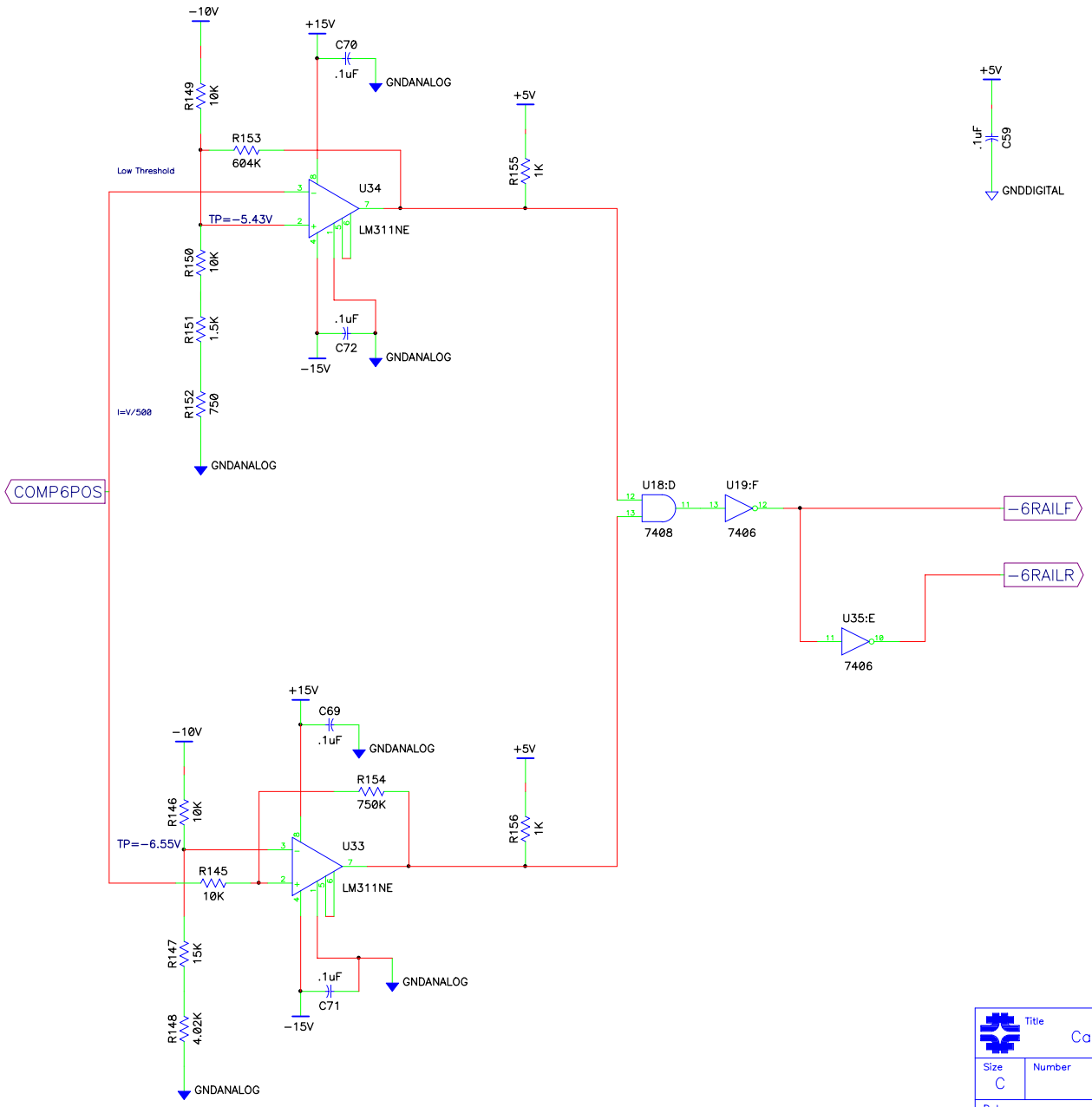

Title	-6 DISPLAY Calorimeter Test Jig	
Size C	Number	Rev -
Date 10-11-96	Drawn by Linda Bagby	
Filename FINALJ.SCH	Sheet 9 of 11	