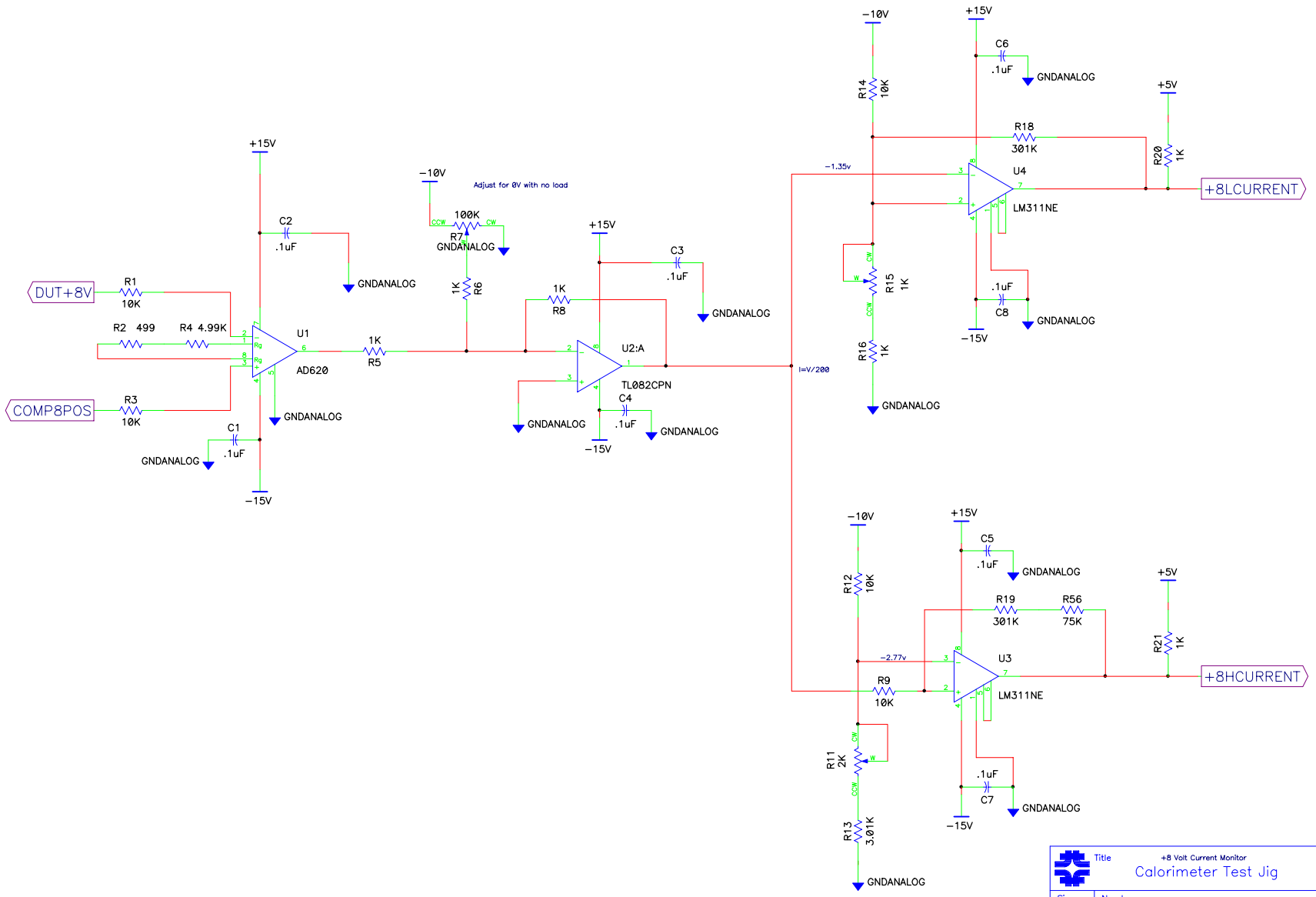
DUT+8V
COMP8POS
R1 10K
R2 499
R4 4.99K
R3 10K
C1 .1uF
C2 .1uF
U1
AD620
+15V
-15V
GNDANALOG
R5 1K
-10V
Adjust for 0V with no load
100K
R7
R6 1K
R8 1K
C3 .1uF
U2:A
TL082CPN
C4 .1uF
-1.35v
I=V/200
R14 10K
R15 1K
R16 1K
C6 .1uF
R18 301K
U4
LM311NE
C8 .1uF
R20 1K
+5V
+8LCURRENT
R12 10K
R9 10K
-2.77v
C5 .1uF
R19 301K
R56 75K
U3
LM311NE
C7 .1uF
R21 1K
+8HCURRENT
R11 2K
R13 3.01K
Title
+8 Volt Current Monitor
Calorimeter Test Jig
Size C
Number
Rev -
Date 10-11-96
Drawn by Linda Bagby
Filename FINALJ.SCH
Sheet 1 of 11