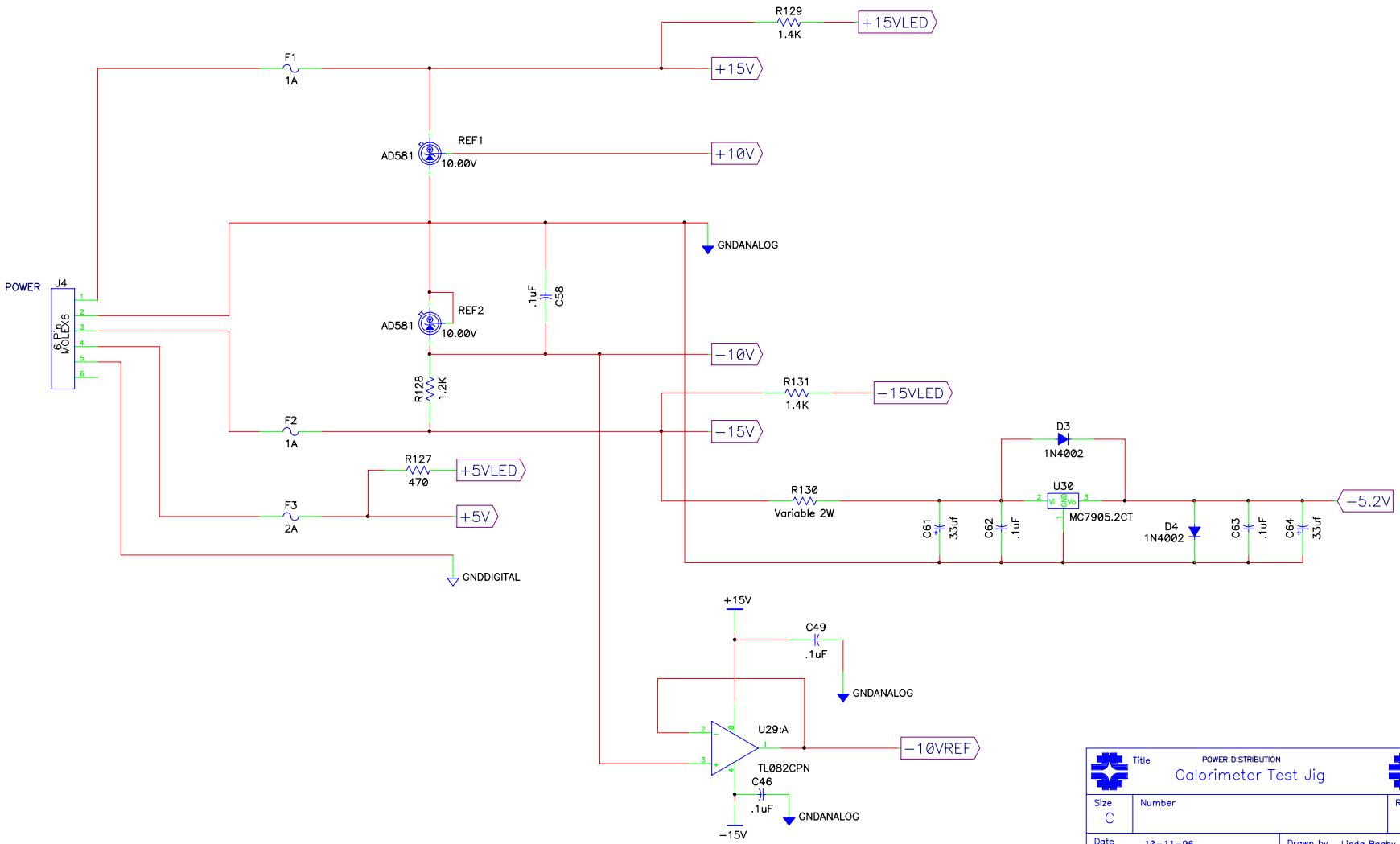

Title	POWER DISTRIBUTION Calorimeter Test Jig	
Size C	Number	Rev -
Date 10-11-96	Drawn by Linda Bagby	
Filename FINALJ.SCH	Sheet 7 of 11	