Control No. 970801A	To: FERMILAB	JTY / KTY Appr.
Last Revision 03	Part no. DO-CAL-PA-V2-A	Drawn By: 7/18/97 R. Blood

SCHEMATIC

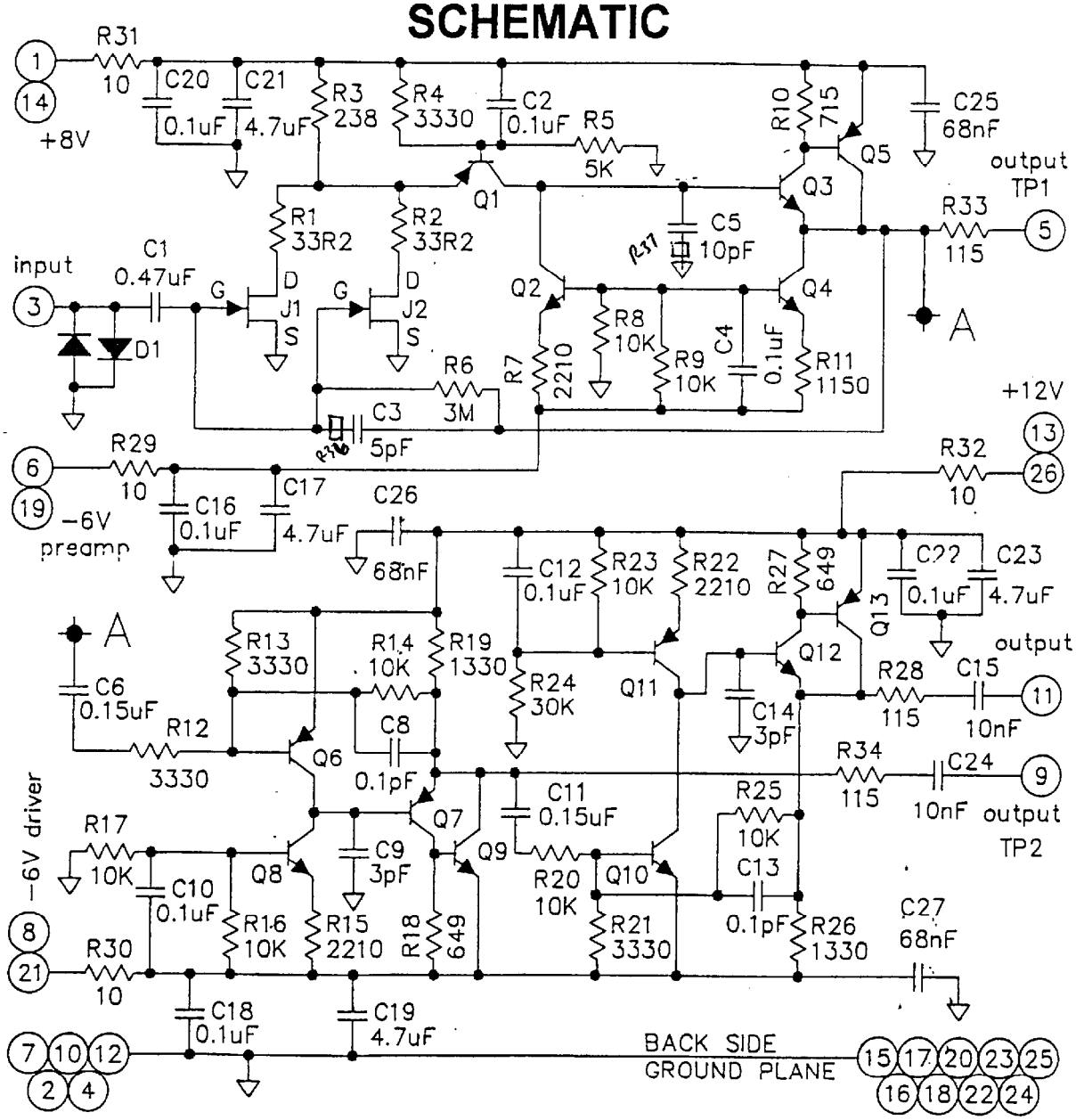

Rev.		By / Date
03	Changed R3 from 178 to 238 ohms.	RB 6/15/98
02	Modified to match Fermilab's changes,	RB 9/5/97

Sheet 7 of 9

TAIYO YUDEN (U.S.A.) INC.