Control No. 975805A	To: FERMILAB	JTY / KTY Appr.
Last Revision 02	Part no. DO-CAL-PA-V2-D	Drawn By: 10/2/97

SCHEMATIC

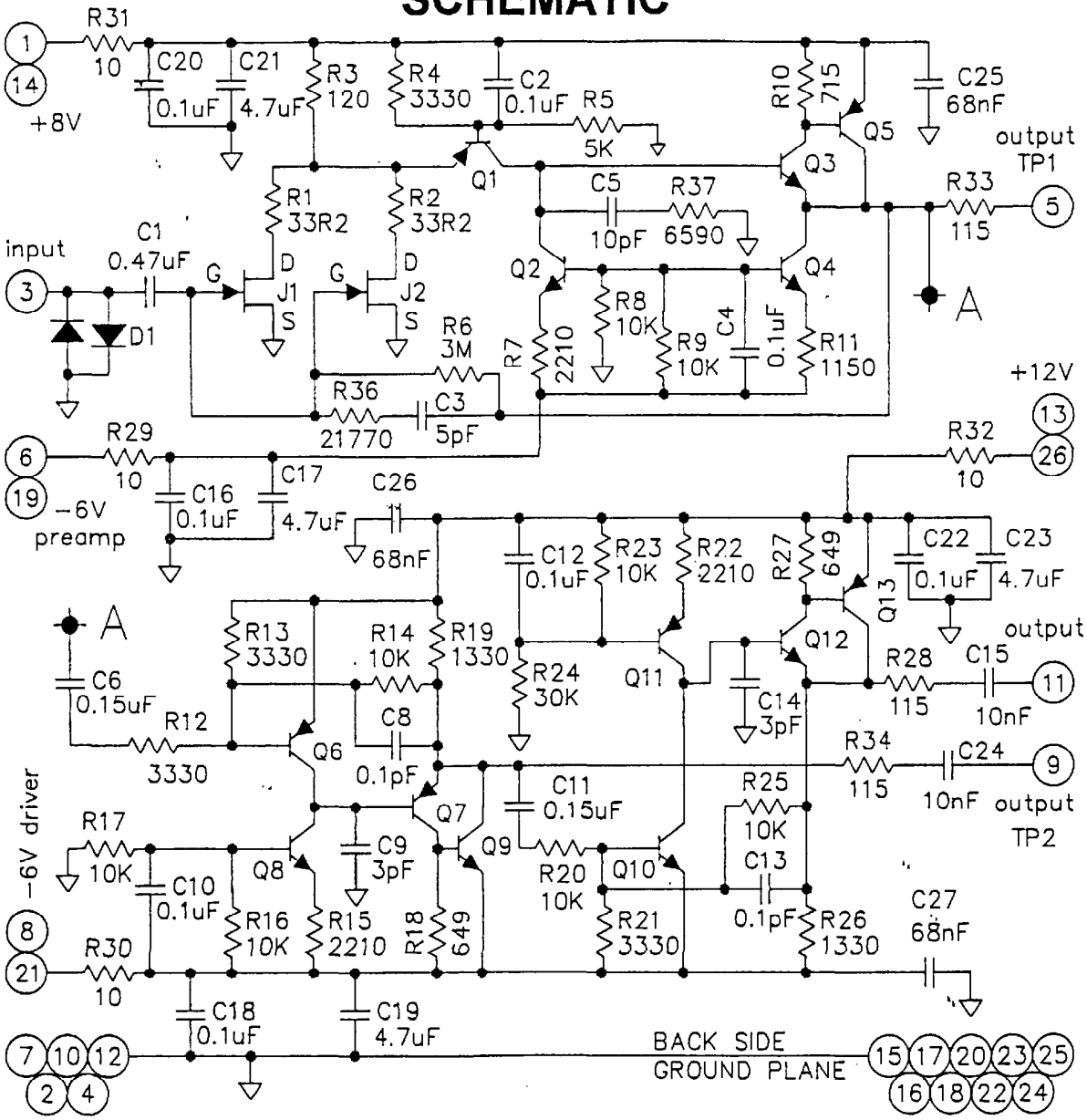

Rev.		By / Date
02	Change R3 from 178 to 120, R36 from 21768 to 21770, and R37 from 10884 to 6590.	RB 9/15/98

TAIYO YUDEN (U.S.A.) INC.