| Control No. 985813A | To: FERMILAB | JTY / KTY Appr. |
|---|---|---|
| Last Revision 01 | Part no. DO-CAL-PA-V2-F | Drawn By: 6/15/98 R. Bhoj |

# SCHEMATIC

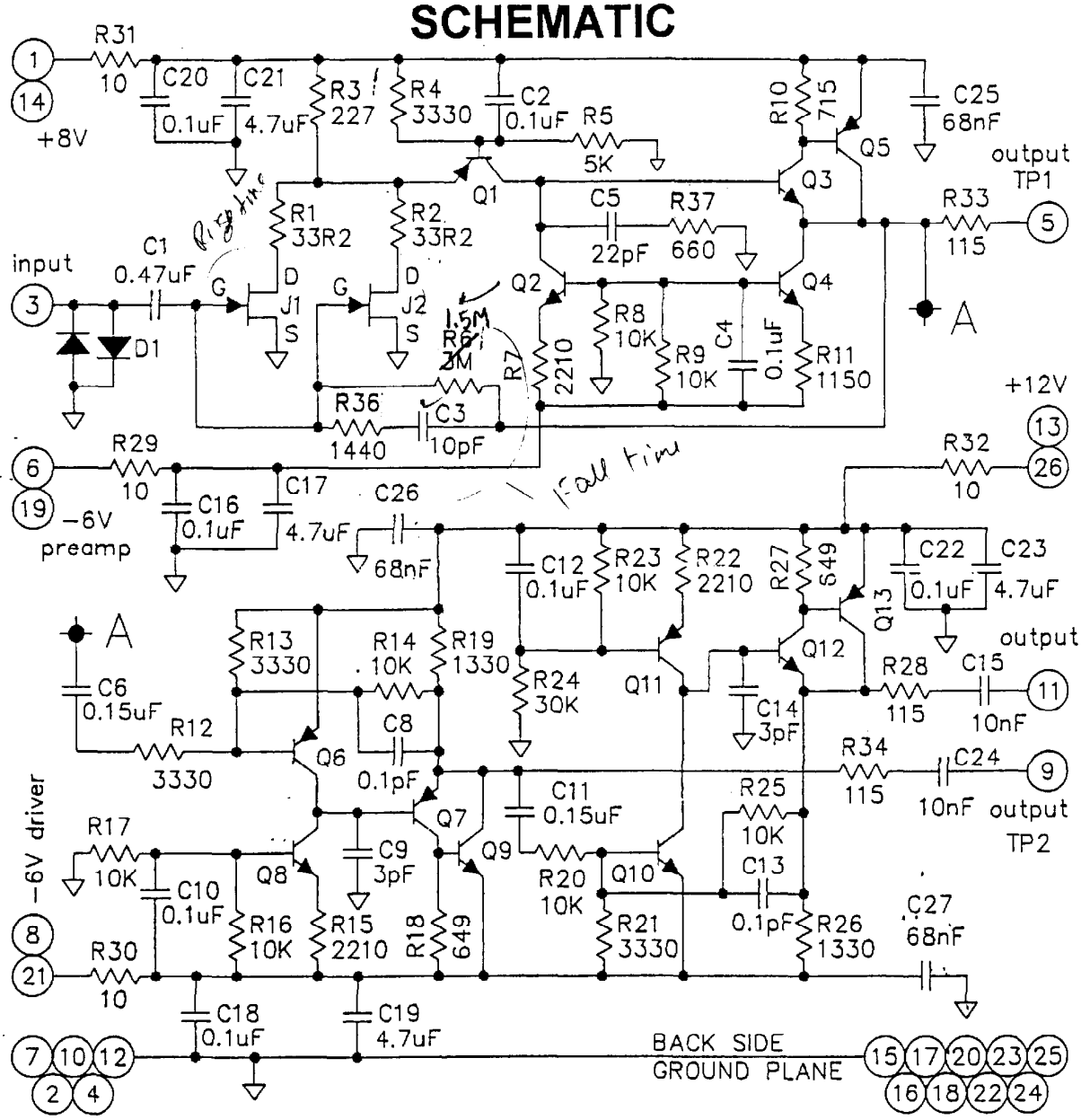


R3 R36 R37
2215 669.7 1433.7

Rev. By / Date

Sheet 7 of 9

TAIYO YUDEN (U.S.A.) INC.