| Control No. 985814A | To: FERMILAB | JTY / KTY Appr. |
|---|---|---|
| Last Revision 01 | Part no. DO-CAL-PA-V2-He | Drawn By: 6/16/98 R. Bhat |

# SCHEMATIC

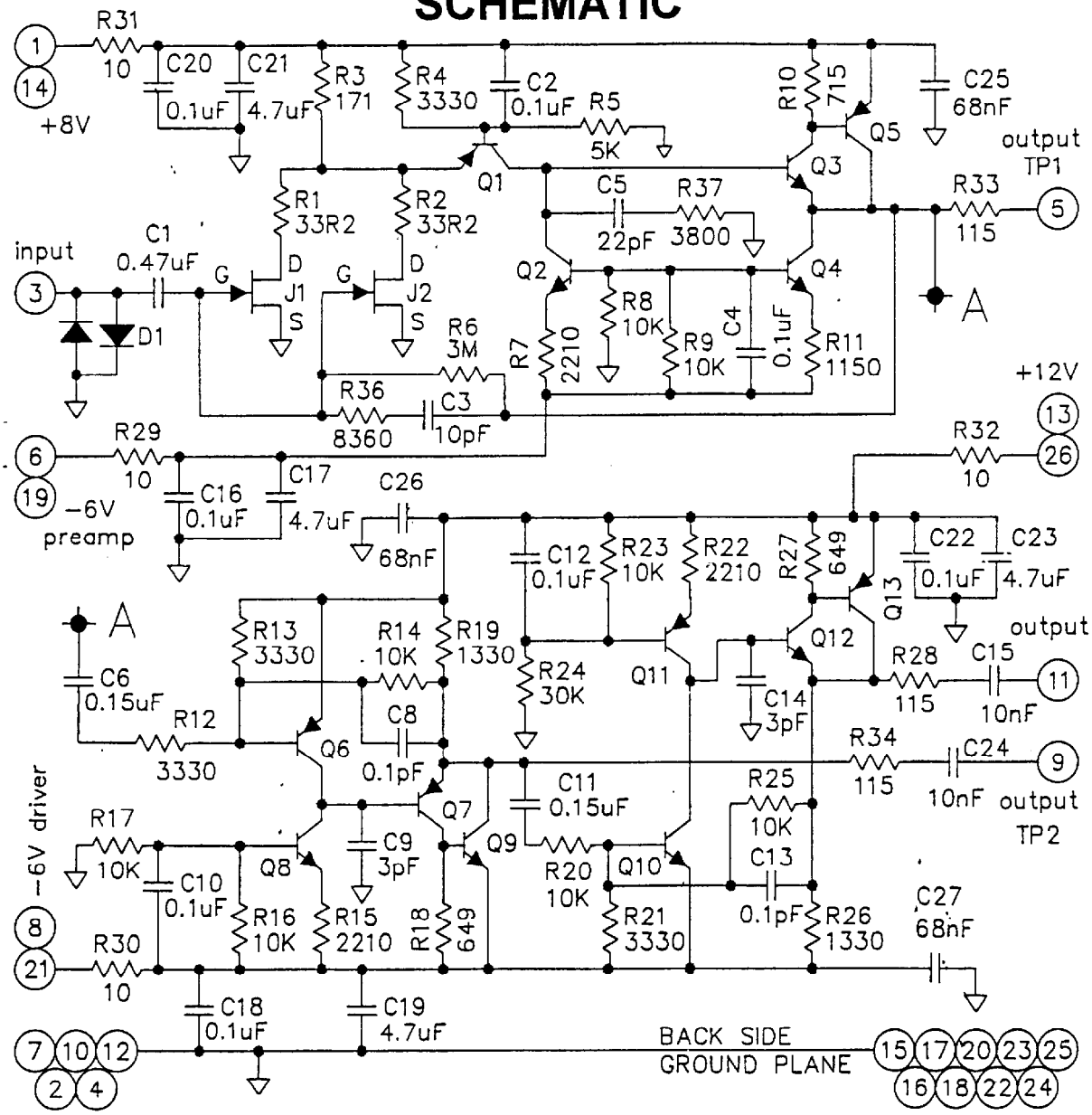


Rev. By / Date

Sheet 7 of 9

TAIYO YUDEN (U.S.A.) INC.