REV	DESCRIPTION	DRAWN	DATE
		APPROVED	DATE
A	ADDED C'SINK TO THREADED HOLES ON TOP OF RAILS	N.CADENA	8/18/99
		J.FOGLESONG	3/7/01

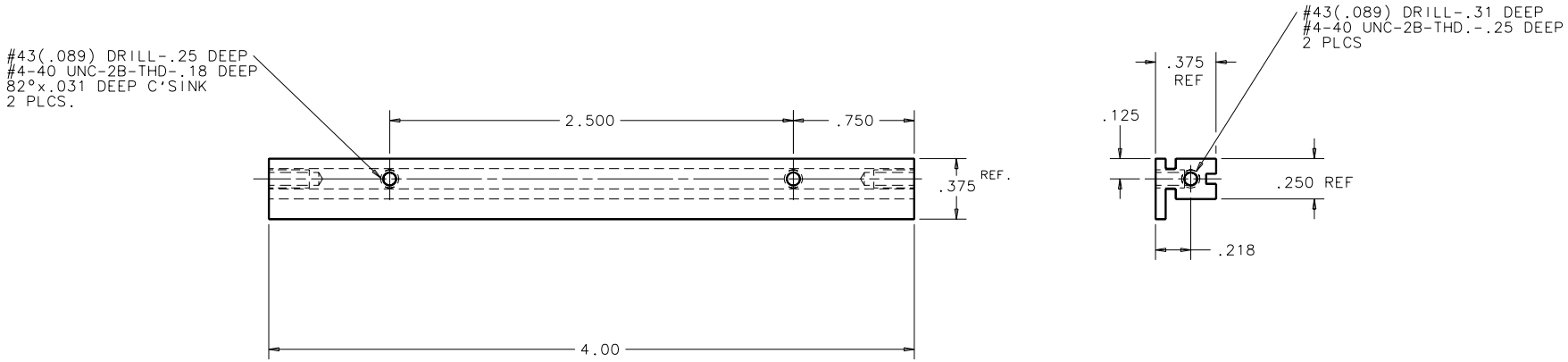

UNLESS OTHERWISE SPECIFIED			ORIGINATOR	J.FOGLESONG	00/APR/1999
.XX	.XXX	ANGLES	DRAWN	C.GRIMM	00-APR-1999
±	±	± 1°	CHECKED	J.REEDER	23-JUN-1999
1. BREAK ALL SHARP EDGES .015 MAX. 2. DO NOT SCALE DRAWING. 3. DIMENSIONS BASED UPON ANSI Y14.5M-1982 4. ALL DIMENSIONS ARE INCHES 5. MAX. ALL MACH. SURFACES 125			APPROVED	J.FOGLESONG	07-JUL-1999
			USED ON	MD-372680	
			MATERIAL	ALUMINUM CHASSIS CARD GUIDE RAIL(FURNISHED)	

FERMI NATIONAL ACCELERATOR LABORATORY
UNITED STATES DEPARTMENT OF ENERGY

PPD/MECHANICAL DEPARTMENT
DZERO UPGRADE-ADJUSTABLE VOLTAGE FANOUT BOX-RAIL

SCALE	DRAWING NUMBER	SHEET	REV
2:1	3823.133-MC-372932	1 OF 1	A

CREATED WITH : Ideas8m4 | GROUP: PPD/MECHANICAL DEPARTMENT

Plotted by cadena on 16-Dec-02 , File: adj_rail.pff