DAQ Run Control Diagram

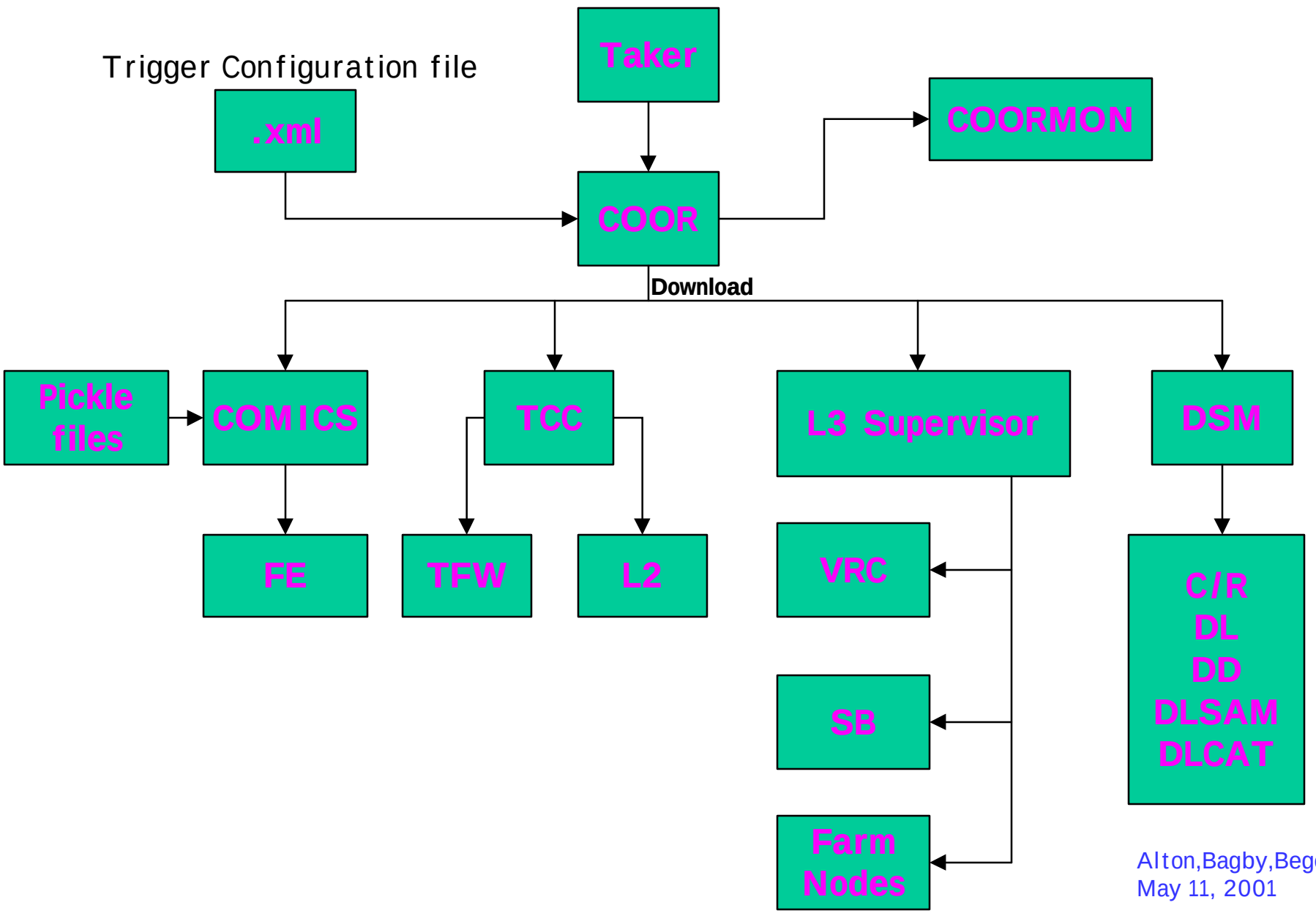

Alton,Bagby,Begel
May 11, 2001

Primary DAQ Data Flow

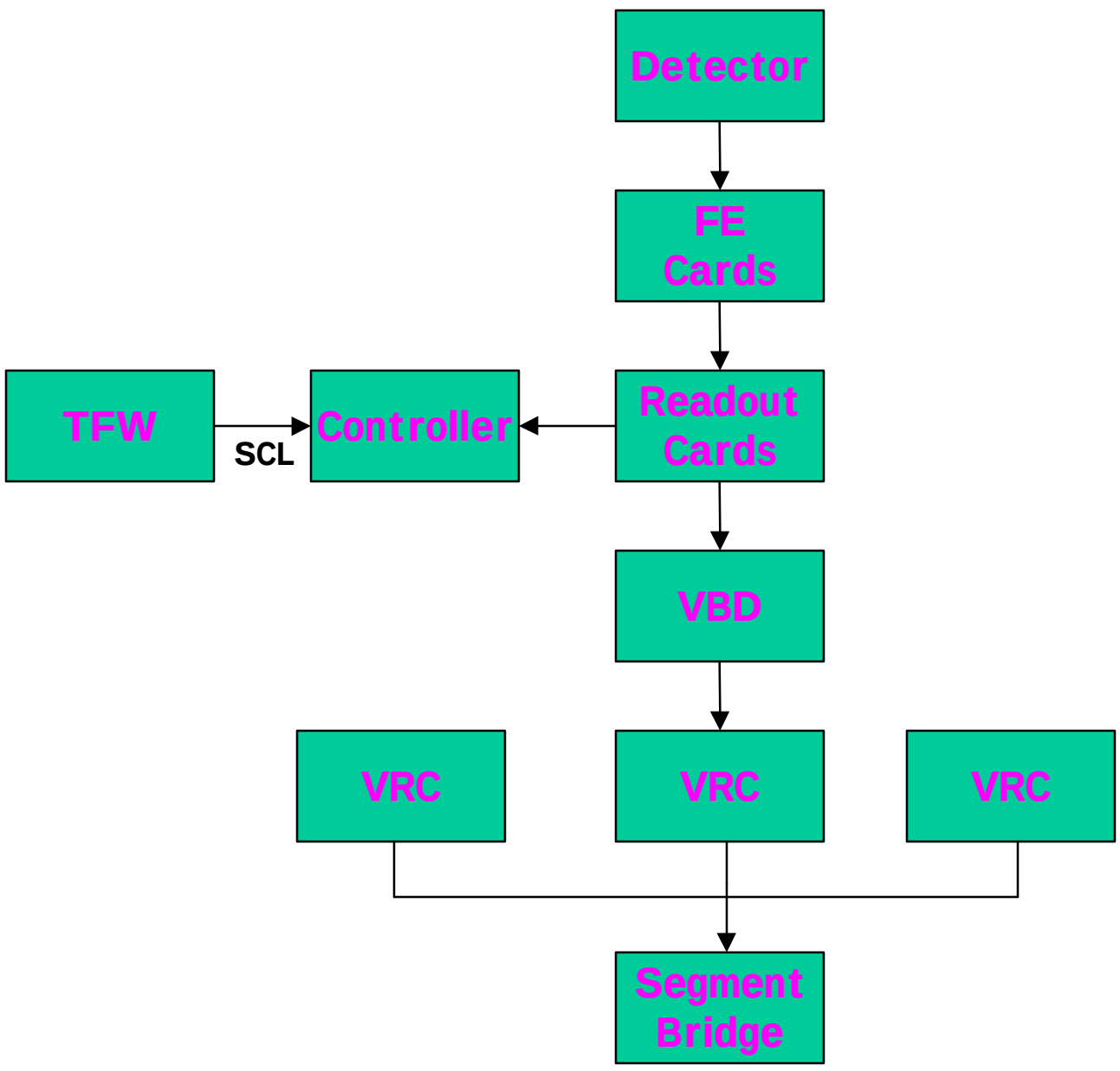

Alton,Bagby,Begel
May 11, 2001

Primary DAQ Data Flow (Con't)

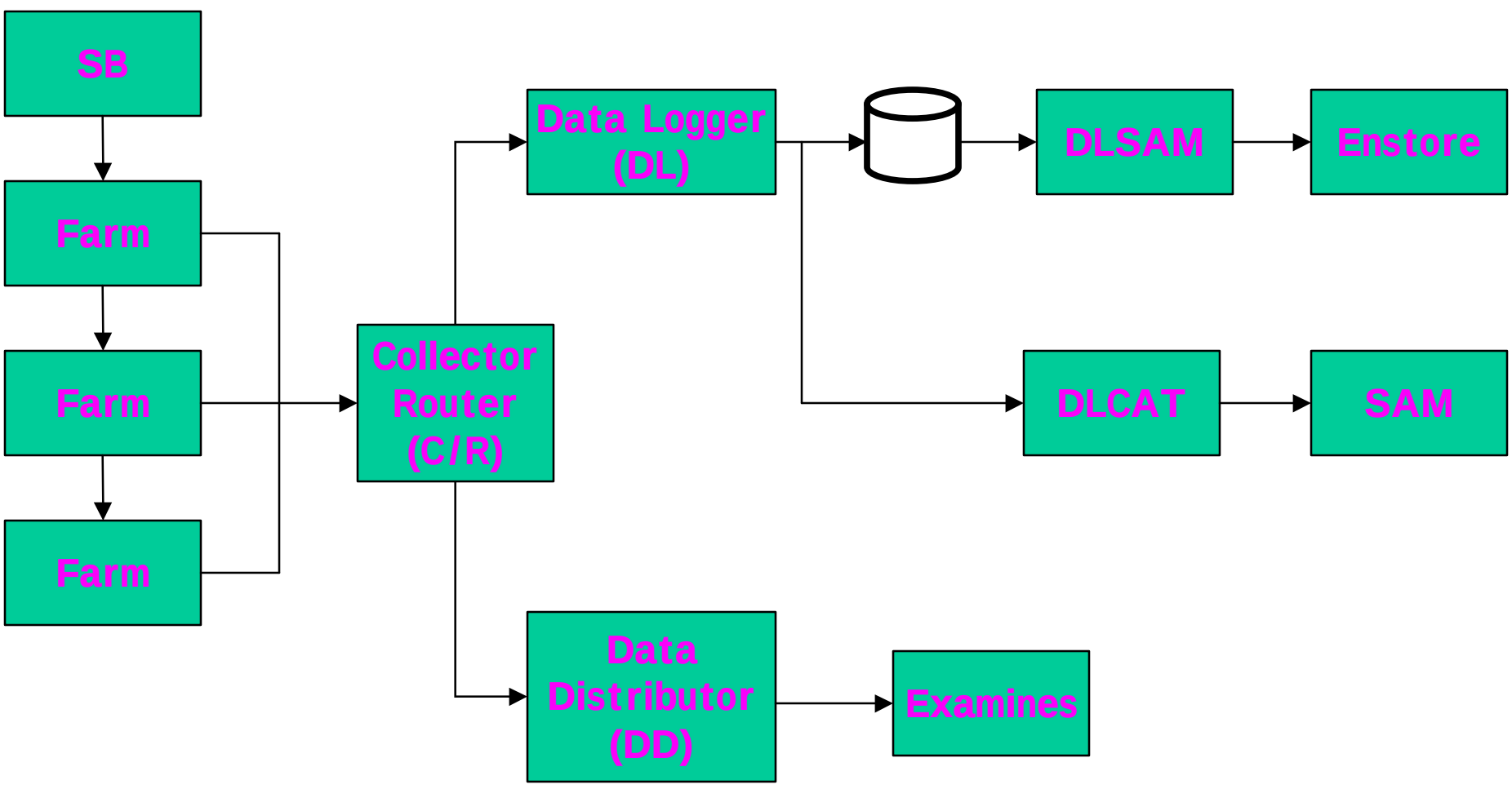

Alton,Bagby,Begel
May 11, 2001

The DØ Upgrade

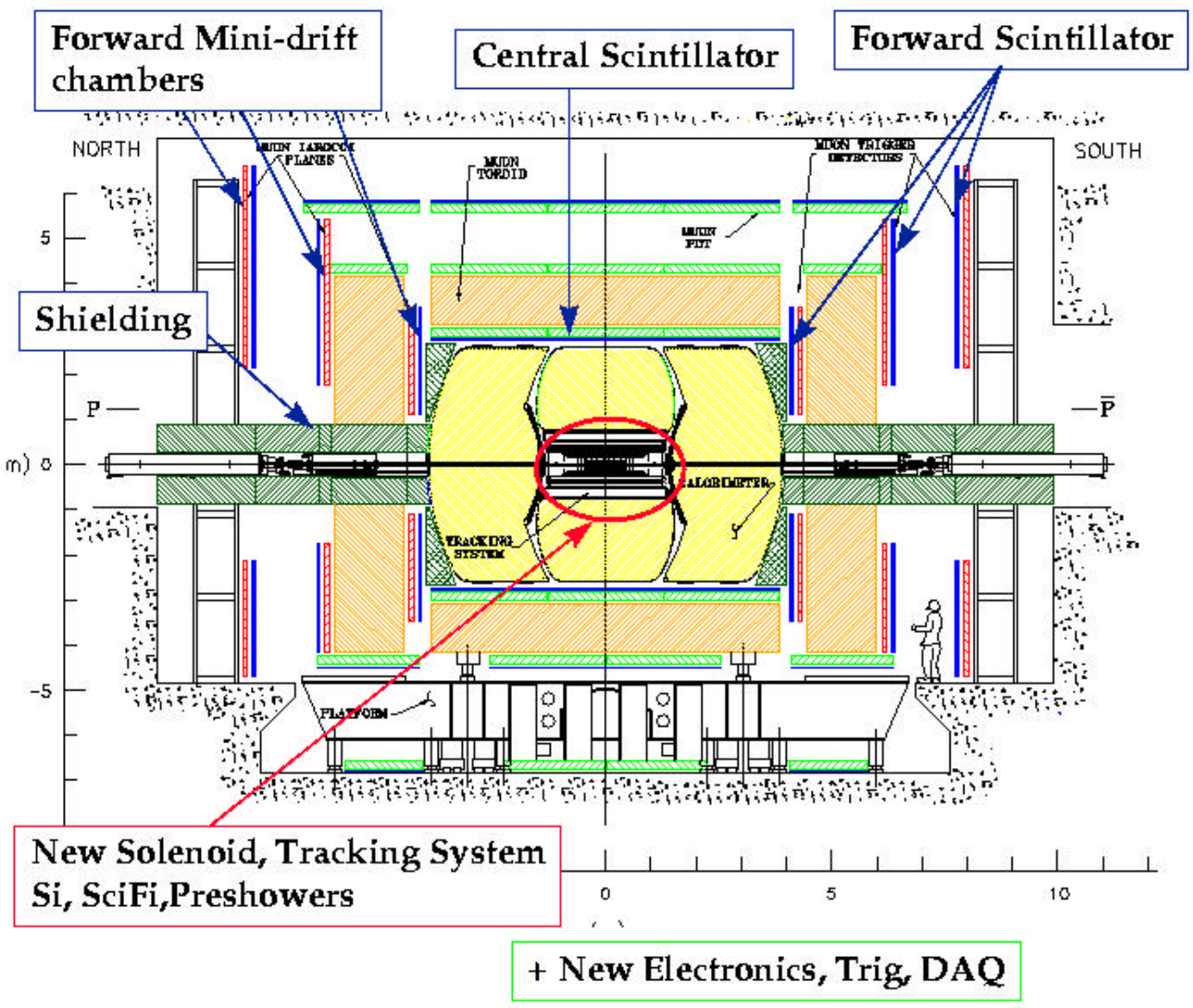

Alton,Bagby,Begel
May 11, 2001