DAQ Shifter Training for the CFT and CTT

Michael Cooke
Rice University

April 19th, 2005

DAQ Shifter Training for CFT/CTT

- Overview of Central Fiber Tracker (CFT)
  - Detector hardware
  - Flow of data
- Special CFT Instructions
  - Secondary DAQ (SDAQ) runs
  - CFT crates are Front End Busy (FEB)
  - CFT shifter on-call
- Overview of Central Track Trigger (CTT)
  - Trigger hardware
  - Flow of data
- Special CTT Instructions
  - How DAQ shifters can help diagnose CTT problems
- Review

Central Fiber Tracker Overview

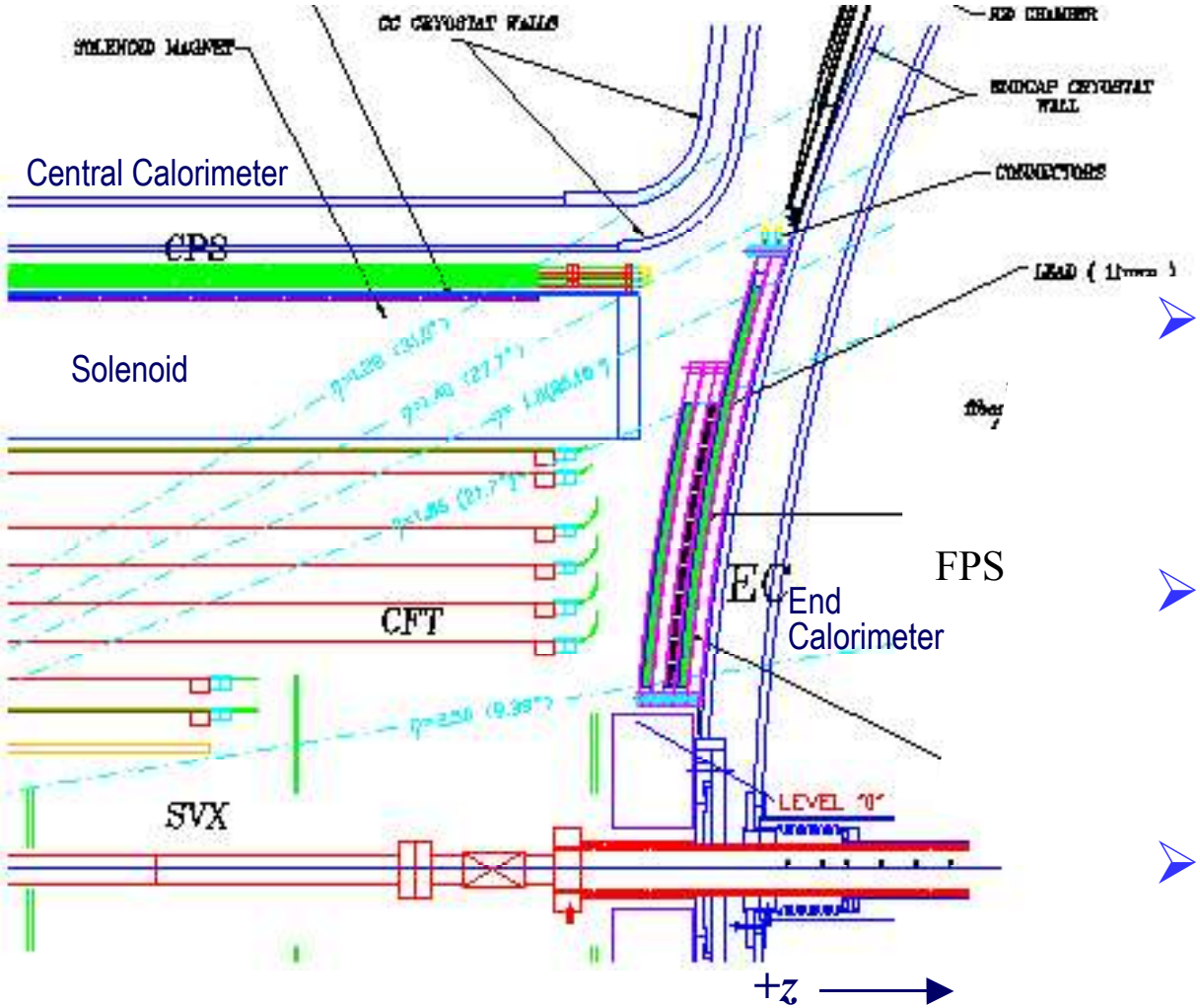

- **CFT + Preshowers:**
  - ~100,000 channels
  - Readout through Visible Light Photon Counters (VLPCs)
- **CFT**
  - 8 Axial Layers (z)
  - 8 Stereo Layers(u,v)
- **Central PS (CPS):**
  - 1 Axial Layer (z)
  - 2 Stereo Layers (u,v)
- **Forward PS (FPS):**
  - 2 MIP Layers (u,v)
  - 2 Shower Layers (u,v)

CFT, CPS, FPS: Sectors

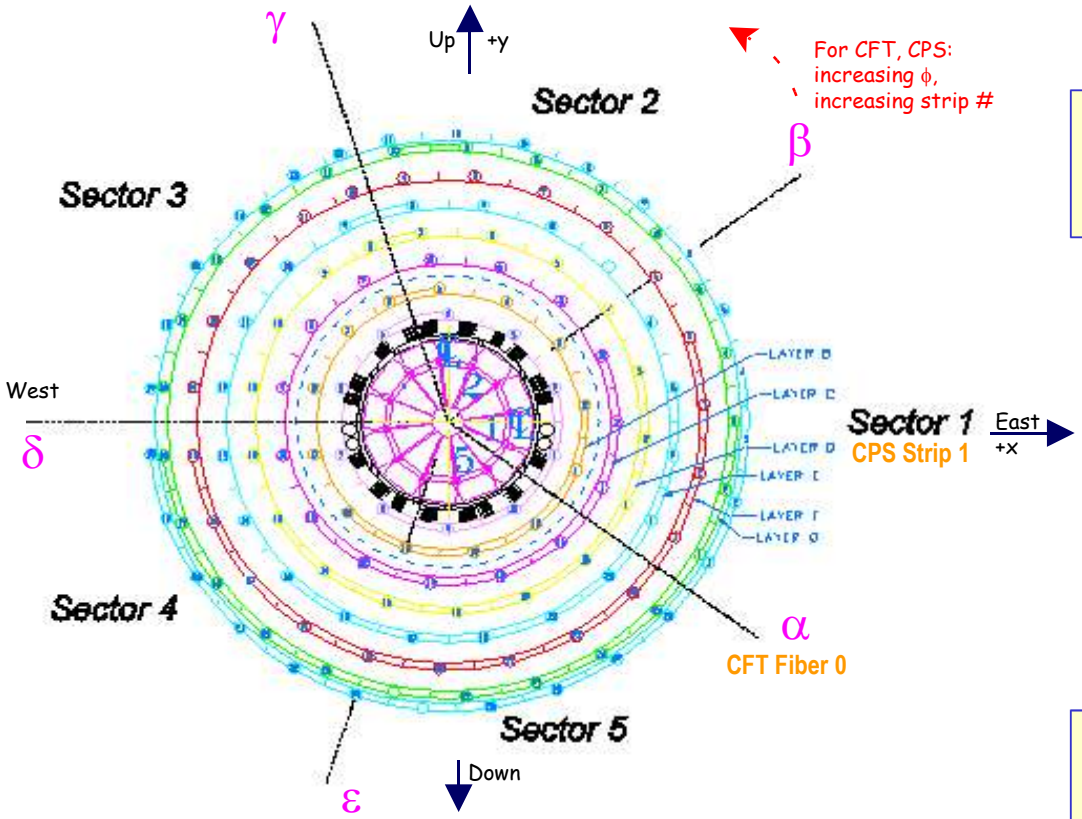

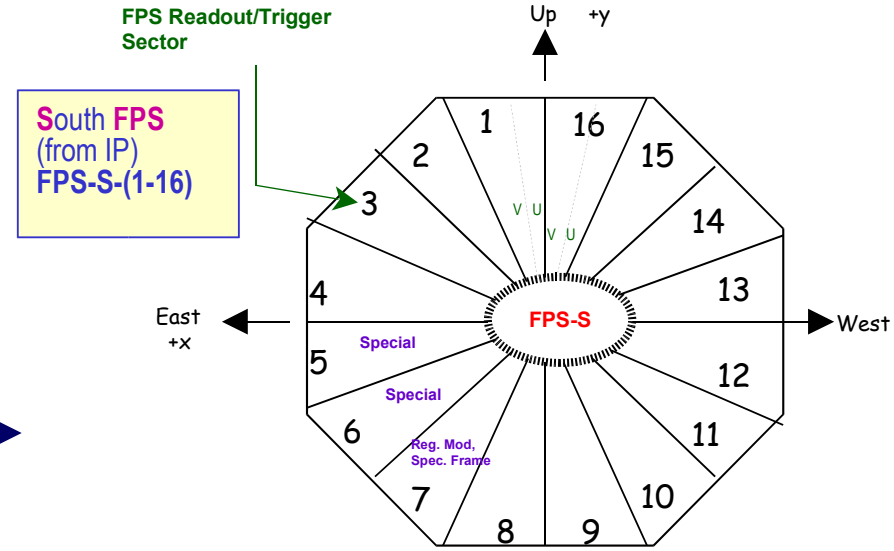

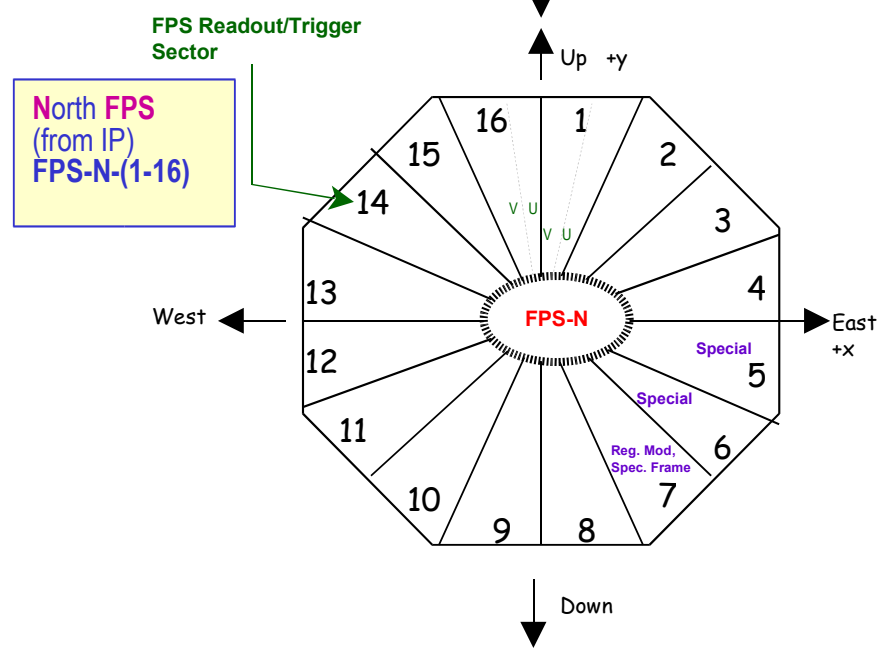

5 "Super Sectors" in ϕ for the CFT & CPS.

Visible Light Photon Counters to read the light signal are on the platform below the calorimeter. All fibers in each SS have the same length waveguide between the scintillating fibers and the VLPC cassettes.

16 Sectors in ϕ for FPS

PS and CFT readout

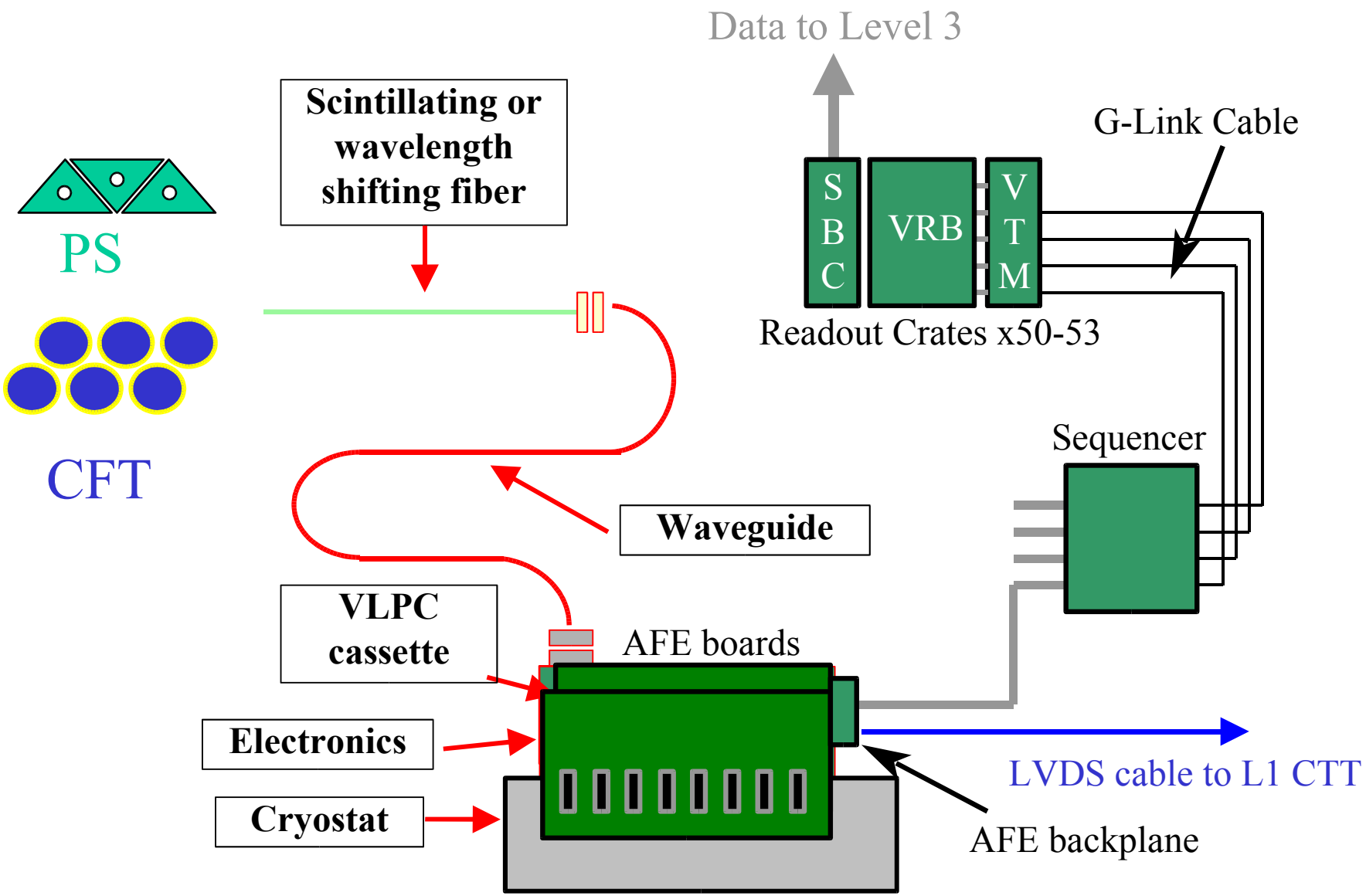

A mock setup is available in DAB3's visitor area. Look on your own or ask an expert for a tour!

Primary DAQ Data Flow

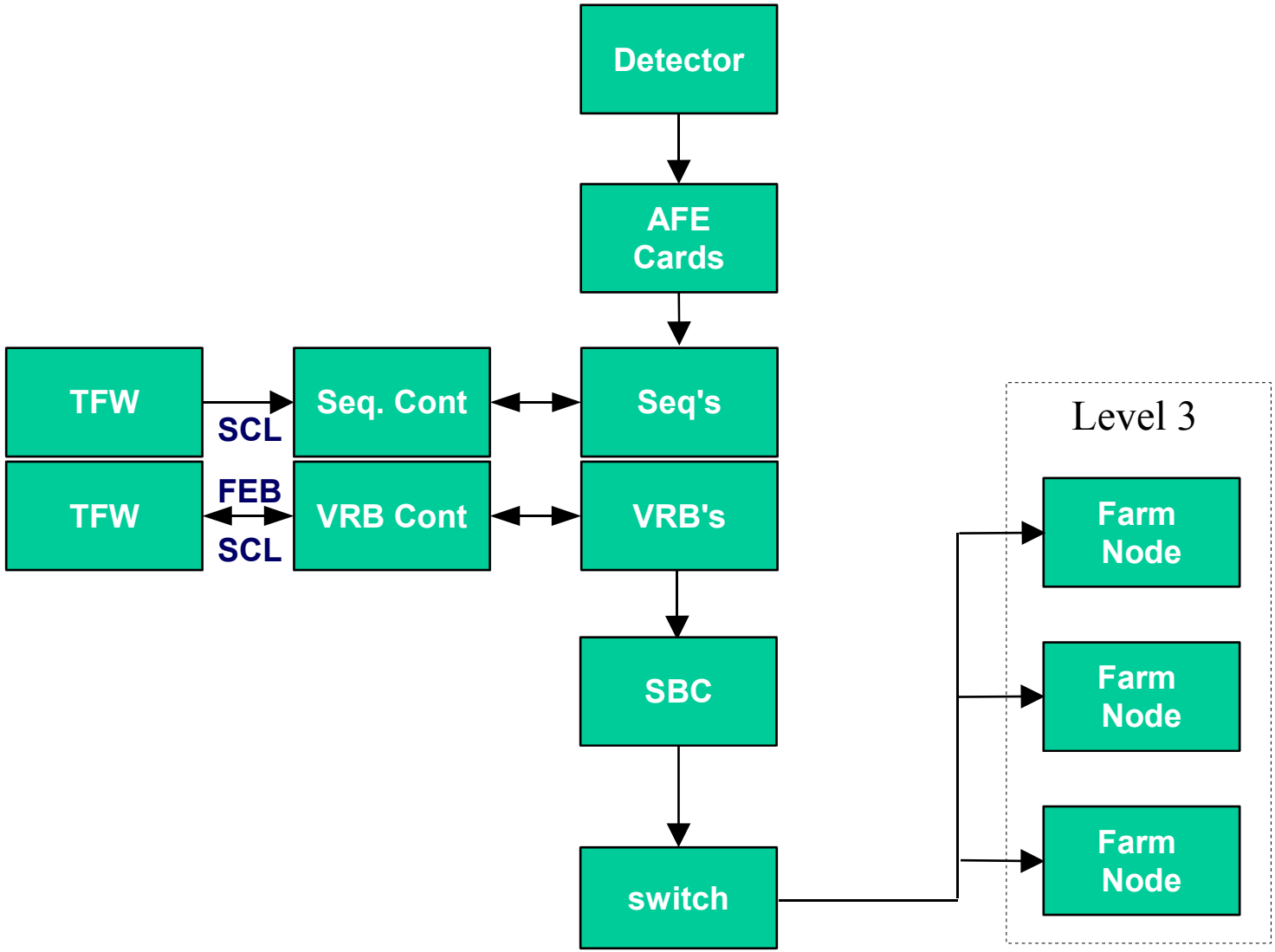

CFT Special Instructions: SDAQ

- SDAQ Runs are an Extremely Important CFT Tool
  - Thresholds calibrated 1-2x a week between stores
    - Full calibration run takes about 2.5 hours...
  - LED system used to study photoelectric peaks in VLPCs
  - Check CFT status after/during access
    - If SDAQ is unavailable, we may have to skip the access!
  - In general, SDAQ is our primary debugging tool before moving into Zero Bias runs
- Special Qualities of CFT SDAQ Runs
  - Does not use L3 System; CFT info read directly from VRB
  - Crates x50-x53 have high L1 busy/deadtime, but this does not impact other runs
  - If PDAQ is dead or not giving L1 accepts WE CAN'T RUN!
    - The reverse is not true, however...

CFT Special Instructions: FEB / On Call

- CFT Crates (x50-53) are Front End Busy (FEB)
  - Please DO NOT issue SCL inits automatically!
  - CFT shifter will run some quick diagnostics, then ask you to perform the SCL init (...maybe twice)
  - If problems persist, CFT shifter has many resources available to troubleshoot the system
    - Quickest fixes are attempted first, with longer fixes (downloads of CFT crates & AFE boards) as last resort before calling expert
- If the CFT Shifter is On-Call
  - DAQ shifter should watch CFT alarm display
    - Known problems that cause alarms are always disabled, so any major alarm could indicate serious problems!
  - Call CFT SHIFTER first, let them call the CFT expert if required...

Central Track Trigger Overview

- The CTT Generates Level 1 Trigger Terms
  - For each beam crossing, discriminator outputs from the Analog Front End (AFE) boards are sent to the CTT
  - A "Mixer" reorganizes the inputs to form 4.5° wedges in φ, forming a total of 80 "sectors" out of the CFT
  - Digital Front End Axial (DFEA) boards use Field Programmable Gate Arrays (FPGAs) to quickly find tracks by "pattern matching" fiber hits within the sector
  - A hardware chain (of more FPGA boards) reorganizes the tracks found by the DFEAs, creates L1 trigger terms, and feeds input to multiple other systems
    - This includes L1 Muon connections & L2 STT connections...
- The CTT "Touches" MANY Other D0 Systems!
  - There are many places things can go wrong...

Central Tracking Trigger Hardware

LVDS Cable (from CFT slide...)

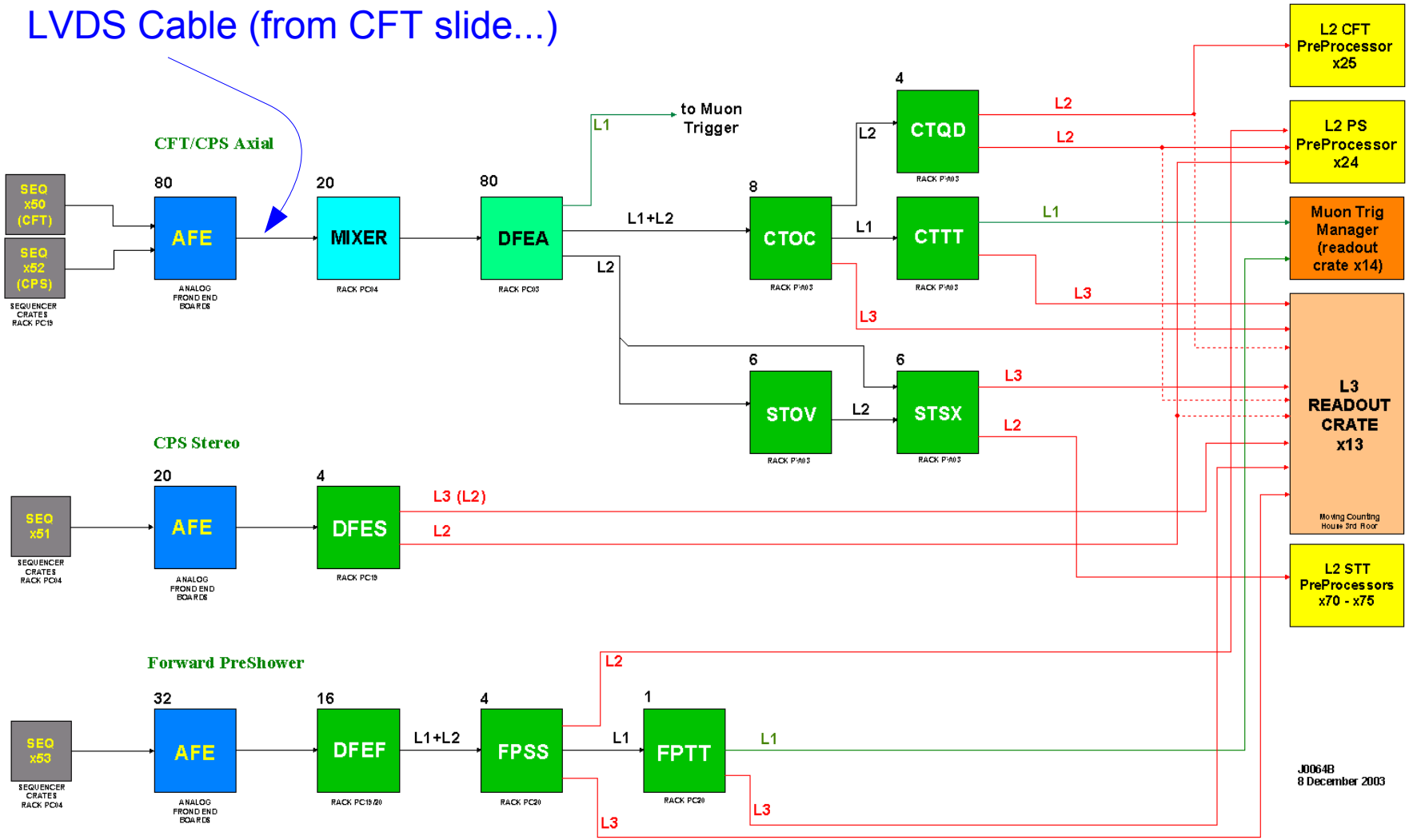

The CTT reads discriminator data directly from the AFE boards and processes it in multiple stages. The CTT chain directly feeds crates x13, 14, 24, 25, and provides inputs to the STT system (crates x70-75).

Many crates are effected directly by the CTT system!

CTT Monitoring Displays

- **CFT Shifter Tool to Quickly Check Hardware Status**
  - Many sets of boards that could cause problems with other D0 subsystems are actively monitored
  - Easy to read: BLUE rows important, RED fields bad!
  - CFT Shifter has macros for each set of boards individually, or can reset the whole chain
  - Used in conjunction with DAQ tools, can help establish if/what is wrong with CTT
  - New GUI in development

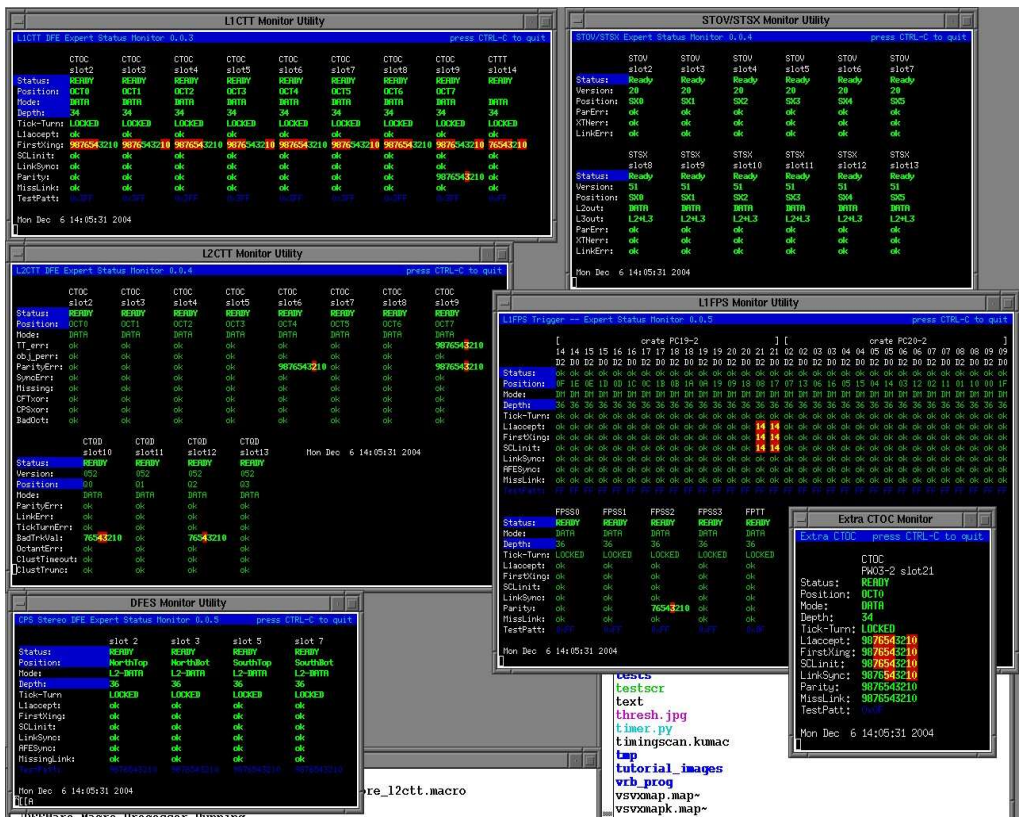

CTT Examine & CTT Alarms

The CTT Examine reads the output from crate x13 and compares it to simulated trigger output from AFE board data. Recently, alarms have been added to the CTT Examine to help pinpoint problems with crate x13's operations, especially a problem where it does not see some of it's input links from the CTT hardware.

It is quite possible for crate x13 to have problems, even though all of the CTT hardware is in proper working order. In this scenario, the CFT shifter's monitoring capabilities are more limited...

File View Settings Help

Group Name	MAJOR	MINOR	INVALID	ACKED	DISABLED	GOOD
Low voltage supplies	0	0	0	0	30	4
Temperature control	8	0	0	0	13	0
Bias voltages	0	15	0	0	0	0
Sequencer and controller	0	0	0	0	0	1
AFE	0	9	3	0	9	3
DFE	0	0	0	0	0	0
CTT	0	1	0	0	0	1
PDAQ	0	0	0	0	0	0
Utility	0	1	1	0	7	1
Total	8	26	4	0	59	8

Status: Connection to server opened

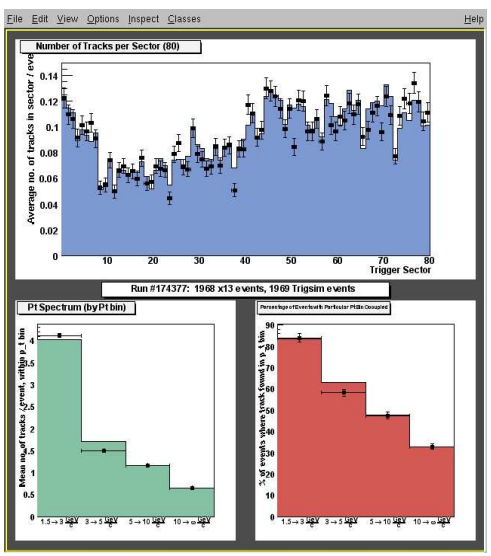

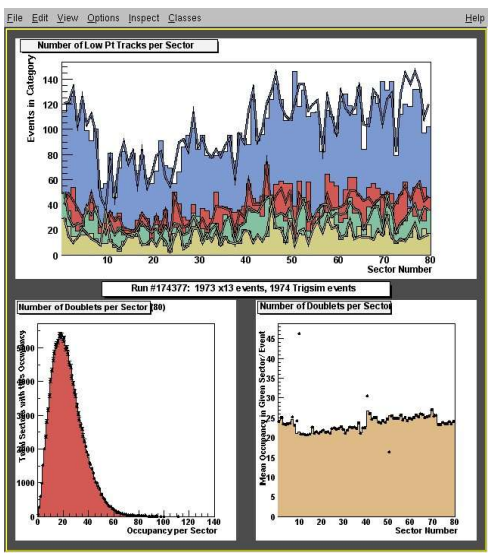

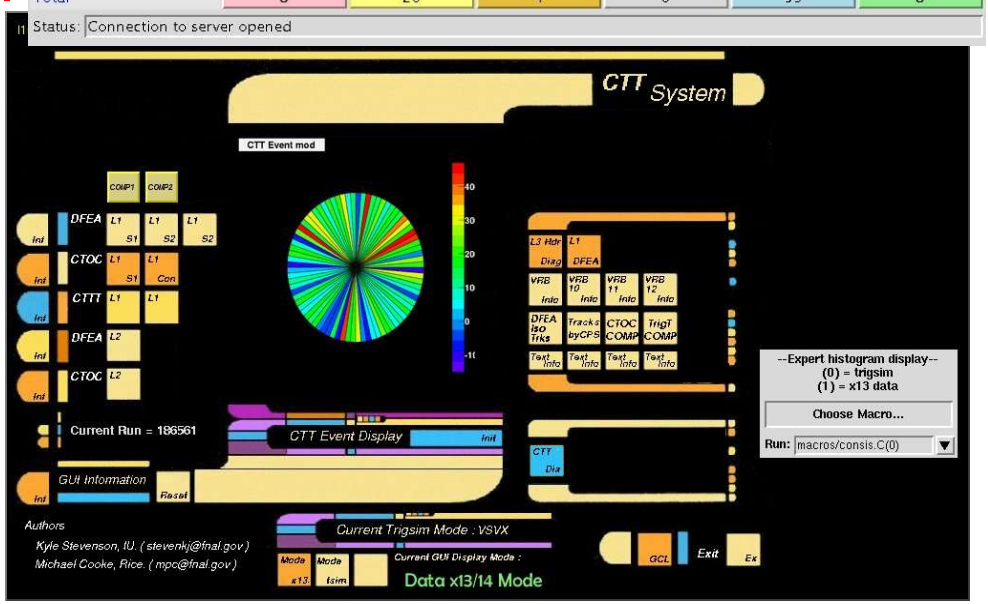

Special CTT Instructions

- **If Crate x13 is FEB**
  - **Please check the SBC for crate x13**
    - **The CFT shifter will eventually try resetting the SBC after attempting other steps, but the DAQ shifter may be able to save time by checking the SBC status immediately**
- **Trigger Rate Problems**
  - **Please check the L2 inputs (action on the right sub sys.)**
    - **CTT Monitoring tools are a useful cross-check here, so if you see a problem with L2, ask the CFT shifter to check on things...**
  - **Missing events problems may also cause CTT Ex. alarm**
- **Secondary Run Interactions**
  - **All interconnected crates must be in a run, with balanced senders and receivers getting L1 accepts**
    - **This should already be accounted for in "resources.xml"...**

DAQ Training for CFT/CTT: Review

CFT Instructions

- **Remember, SDAQ Runs:**
  - Need good PDAQ run
  - CFT has high L1 busy %
  - Doesn't use L3 readout
- **If crates x50-53 are FEB:**
  - Do not issue SCL init automatically...
  - Wait for CFT to ask for it
- **If CFT shifter is On Call:**
  - Watch for CFT alarms
  - Call CFT shifter first, they will call expert if needed

Jadzia Warchol:
warchol@fnal.gov

CTT Instructions

- **If crate x13 is FEB:**
  - Check x13's SBC for problems to save time
- **Trigger rate problems:**
  - Check L2 inputs
  - Cross check with CTT Monitoring Display
  - Missing events may cause CTT Examine alarms...
- **Multi-Run Interactions:**
  - All interconnected crates must be in same run...

Stefan Gruenendahl:
stefan@fnal.gov