Introduction to the DAQ

Bill Lee

DAQ Shifter Tutorials
25 October 2005

Control Room Shifters

- There are five shifters that are required to be on shift during data taking.
  - Captain – In charge of making decisions that could effect data taking.
    - GM – Watches data for irregularities
  - Three Detector Shifters
    - CFT
    - SMT
    - CALMUO
  - DAQ
- In addition, the OPs shifter looks after general operations

DAQ Shifter

- The DAQ shifter is the key to D0's ability to record quality data.
- It is his job to make sure that the DAQ system keeps data flowing.
  - If data flow stops, the DAQ shifter analyzes the problem and solves it directly or directs it to the appropriate detector shifter.

Shifts

- 3 shifts per day
  - Owl (0:00 – 8:00)
    - A Monday owl shift begins before the Monday day shift.
  - Day (8:00 – 16:00)
  - Eve (16:00 – 24:00)
- You should arrive 15 minutes early to your shift to find out issues of the previous shifts.
- It is best to have read the run plan and the log book before arriving to your shift.

DAQ Schedule

- There are three training (buddy) shifts
  - If you are not ready after training, more can be scheduled.
  - Additional training is available from shifter tutorials.
- DAQ shifts are a total of six weeks.
  - One week on then two weeks off
  - Rotate through DAY, EVE and OWL

Safety Training

- The DAQ shifter and the OPs shifter are required to be around 24 hours per day, so they need to be trained to make a controlled access. This requires:
  - D0 Hazard Awareness
    - You should already have this.
  - LOTO Level 1
    - Offered occasionally, takes 15 min, contact Eric McHugh.
  - Radiological Worker
    - Through ES&H, 5 hours, offered ~weekly
  - Controlled Access
    - Through ES&H, 2 hours, offered ~weekly

The Tevatron

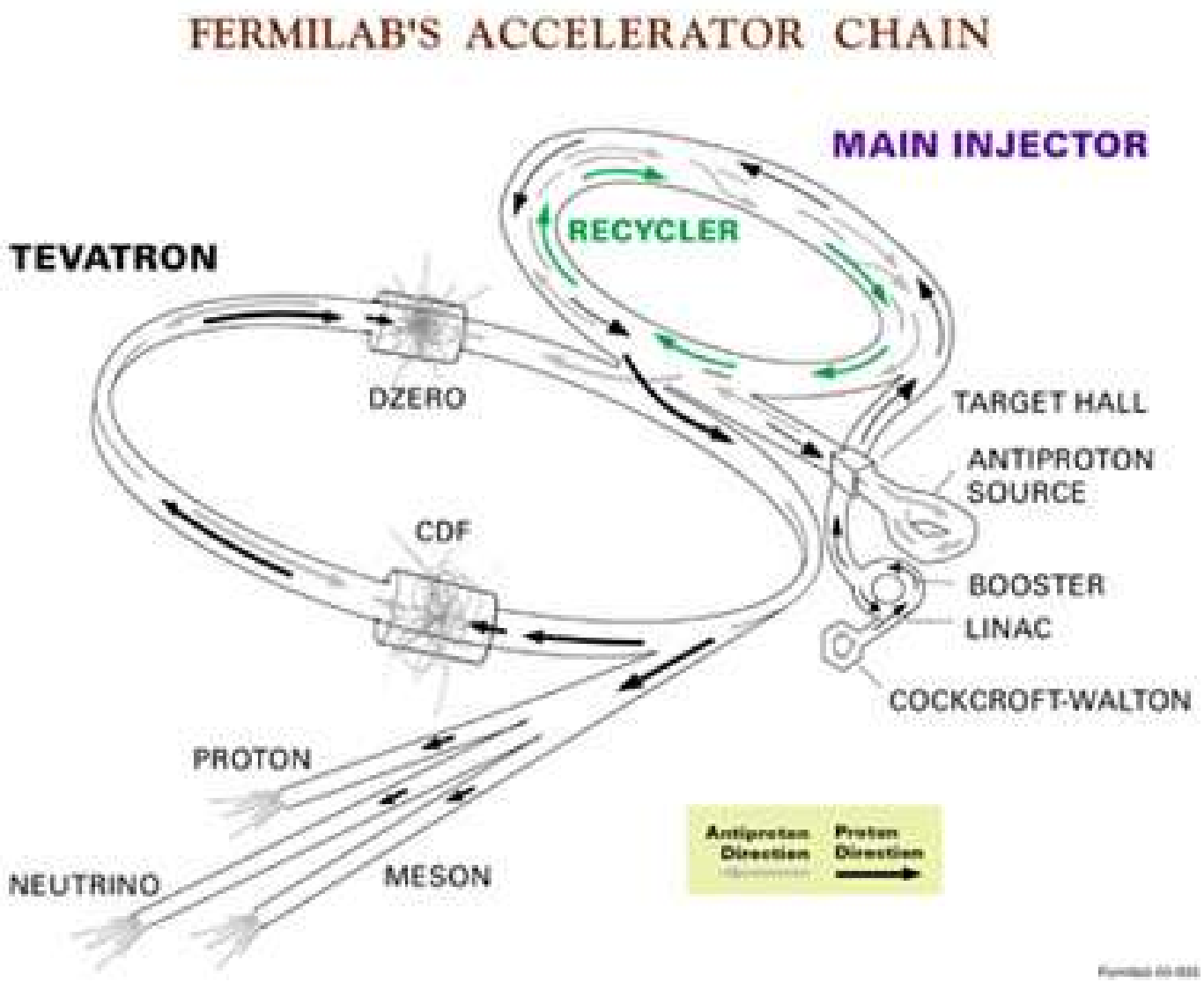

Terms to know:

- Stack
- Accumulator
- Stash
- Recycler
- Store
- Luminosity

Channel 13

Accelerator Division Notification

Collider Operations

SC time = 26.0 / 66.0 Feb 22 2005-15:22:55

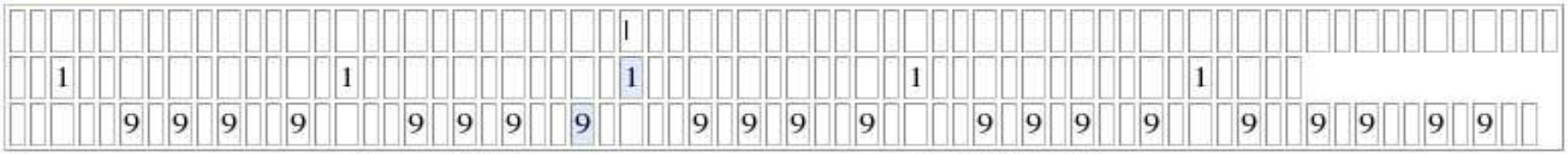

Area	Current State	Last State Change
Complex	High Energy Physics	
Collider	HEP	Tue Feb 22 05:41:36 CST 2005
MainInjector	Operating	Tue Feb 22 11:50:05 CST 2005
Tevatron	Colliding Beams	Tue Feb 22 03:59:35 CST 2005
PbarSource	Stacking	Tue Feb 22 11:59:03 CST 2005
Recycler	Store / Cooling	Tue Feb 22 11:50:11 CST 2005

Store#	**4000**	TevKE	**979.09**GEV	Stack	**45.04**E10		
B0Lum	**35.27**E30 (81.48)	TevDC	**0.86**E13	AccRt	**11.12**mA/h	MIBeam	**0.00**E12
D0Lum	**32.59**E30 (71.78)	TevPR	**7764.63**E09	ProdEff	**12.51**E-6	RBeams	**57.78**E10
SDur	**583.35**MINS	TevPB	**776.31**E09	MB	**5.57E16**P/hr	Temp	**32.19**degF (0.10 degC)
MT	**7.E9**ppp	MC	**1.65E10**ppp				

```
22 Feb 2005 14:06:06
Store #4000 colliding.
Stacking.
Beam to MiniBooNE and MIPP.
Recycler stashing pbars.
```

The D0 Run II detector

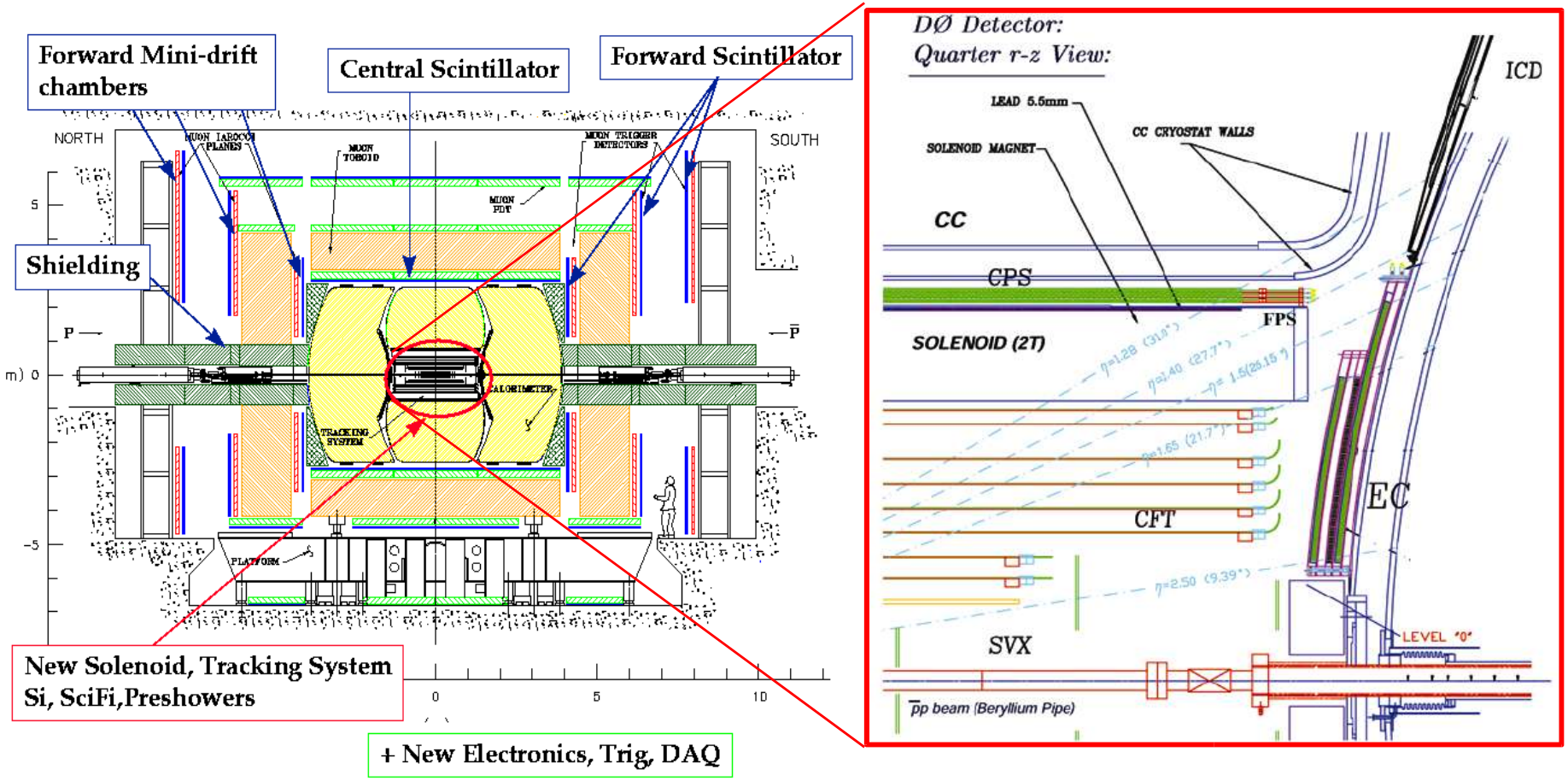

DAQ

- Many parts
  - Controls
  - Triggering
  - Readout
- It all has to work together.

Run Control and Configuration

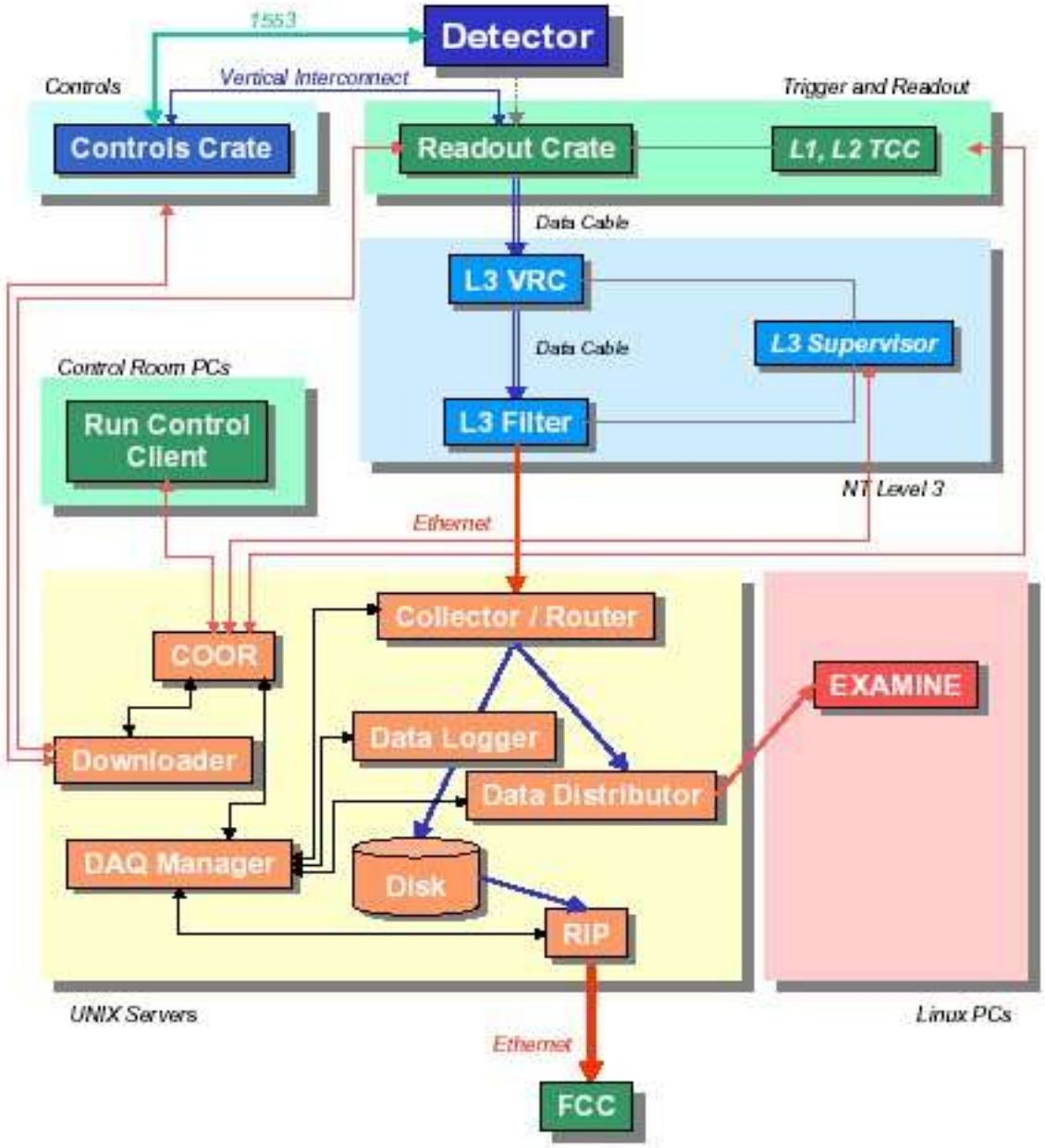

COOR Information Flow

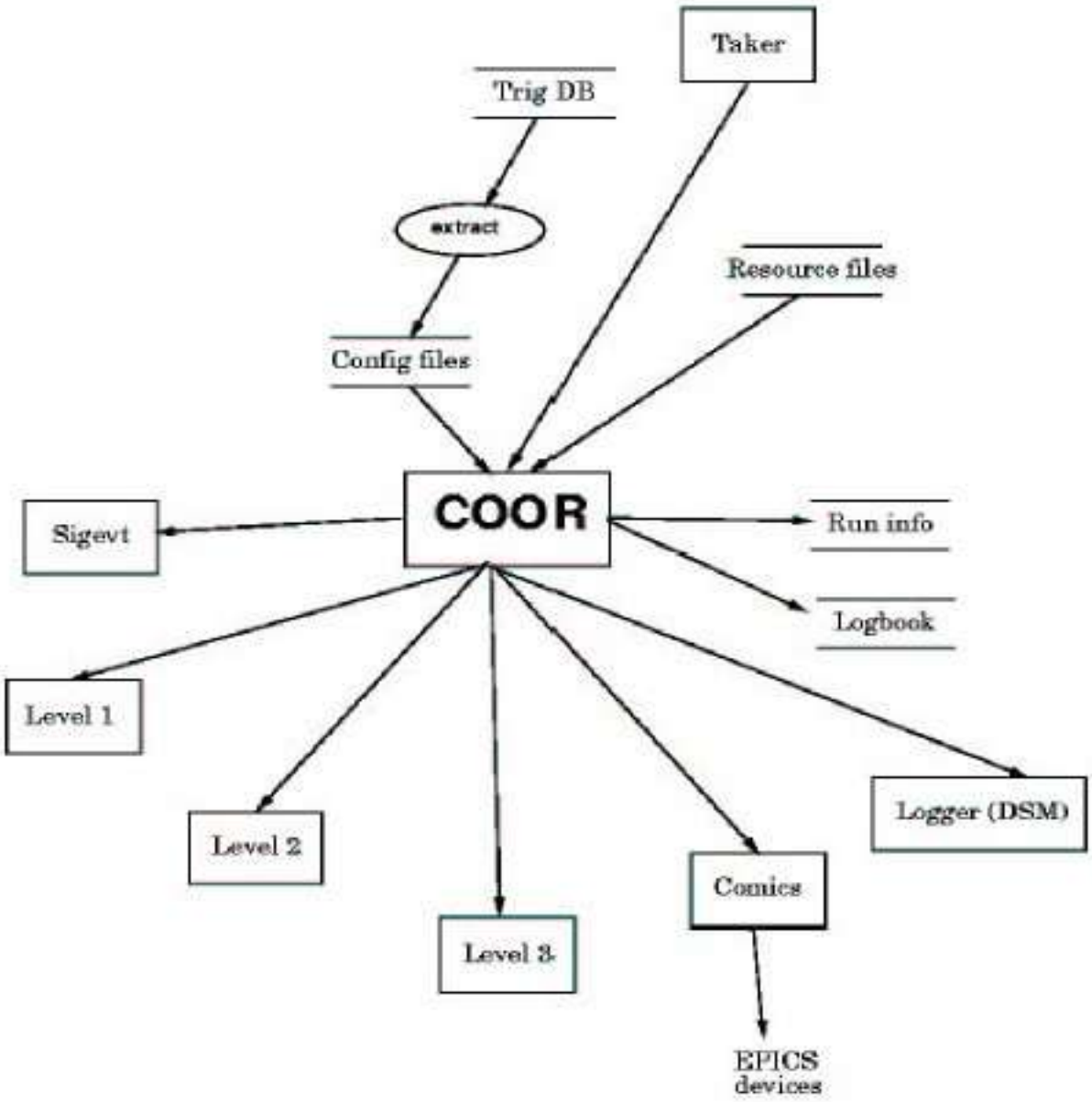

SES

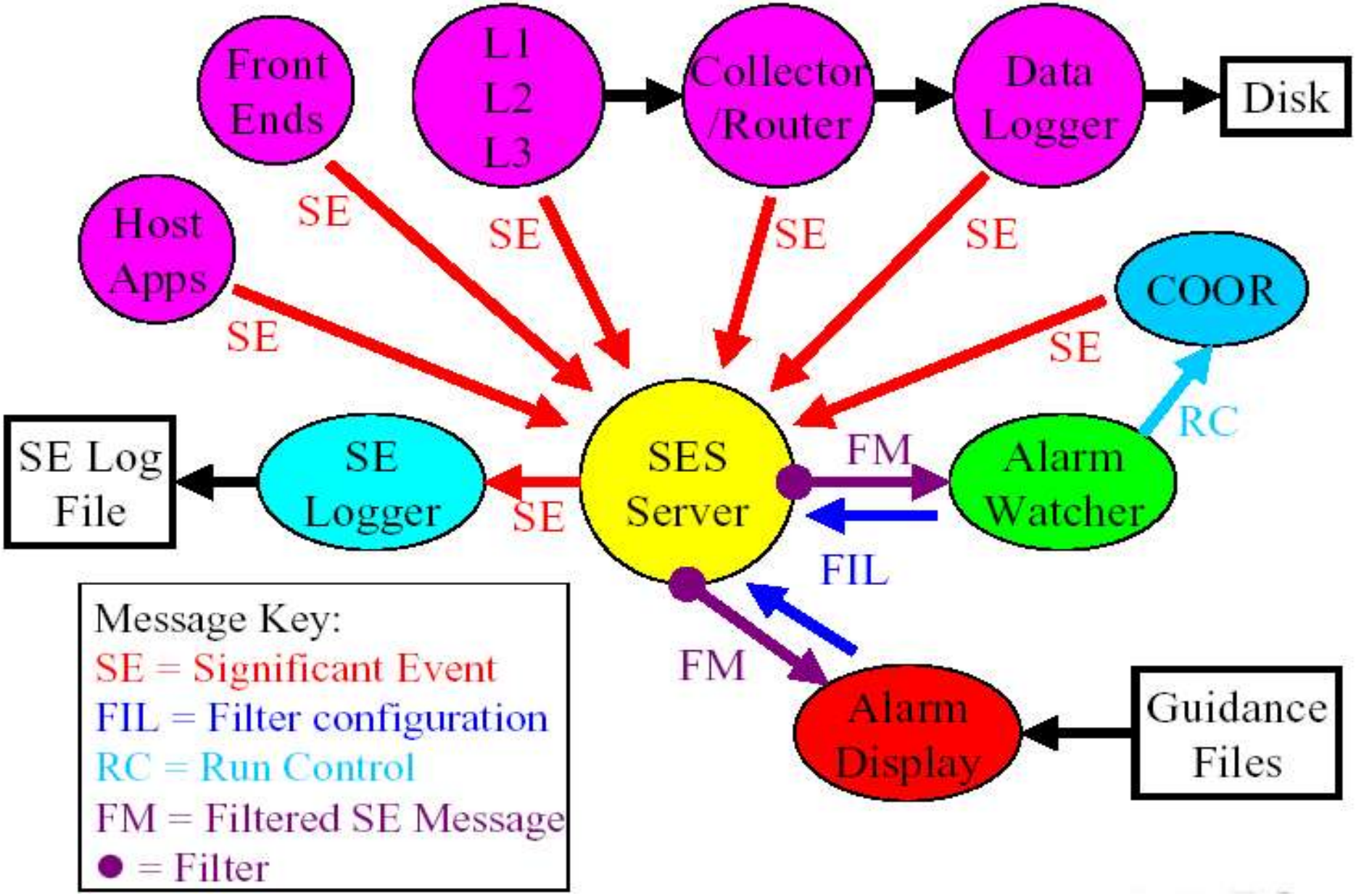
Front Ends
L1 L2 L3
Collector /Router
Data Logger
Disk
Host Apps
SE
SE
SE
SE
SE
SE
COOR
RC
SE Log File
SE Logger
SE
SES Server
FM
FIL
Alarm Watcher
FM
Alarm Display
Guidance Files
Message Key:
SE = Significant Event
FIL = Filter configuration
RC = Run Control
FM = Filtered SE Message
● = Filter

The D0 Trigger System

But data acquisition rate is limited to 50 Hz

⇒ 3 Level Trigger System

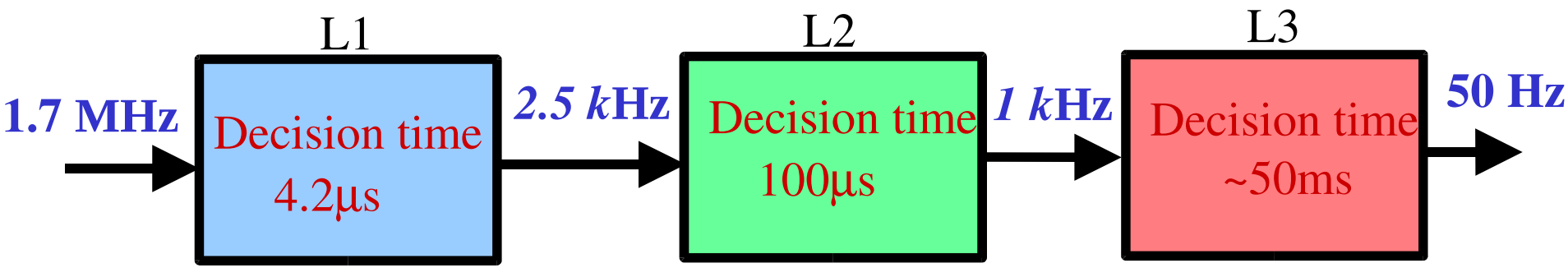

- **Hardware based**
- **Simple Signatures in each Sub-Detector**

- **Software and Firmware based**
- **Physics Objects e,μ,jets, tracks**

- **Software based**
- **Simple versions of reconstruction algorithms**

The D0 Trigger - L1/L2

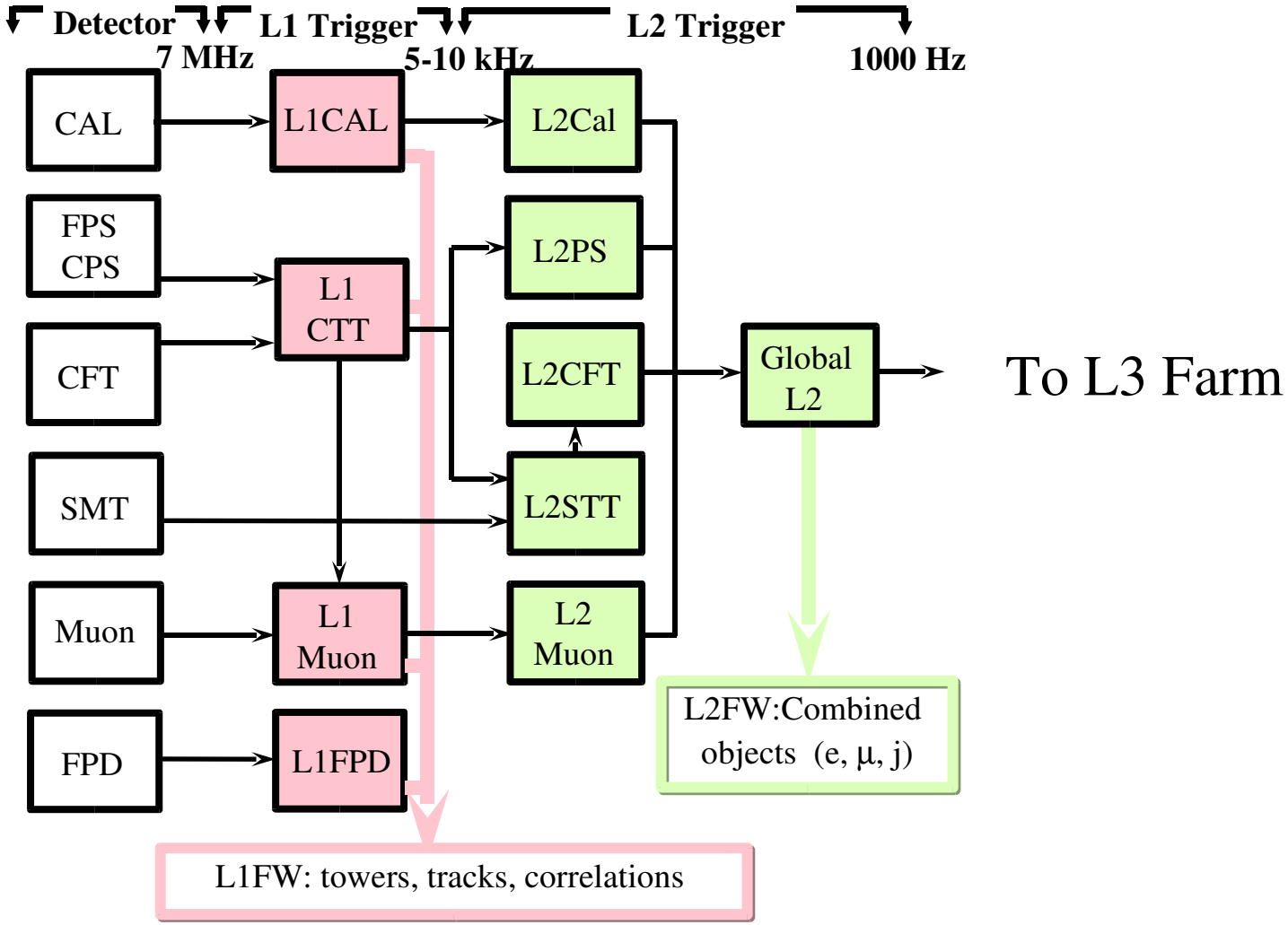

A Typical Readout Crate

After a L1 accept the data is stored in the Input Buffers of the crate.

Input buffers full -> L1 Busy

On a L2 Accept the data is moved to the Output buffers and the SBC is told the data is ready to be moved to L3.

Output buffers full -> L2 Busy

On a L2 reject, the data is discarded.

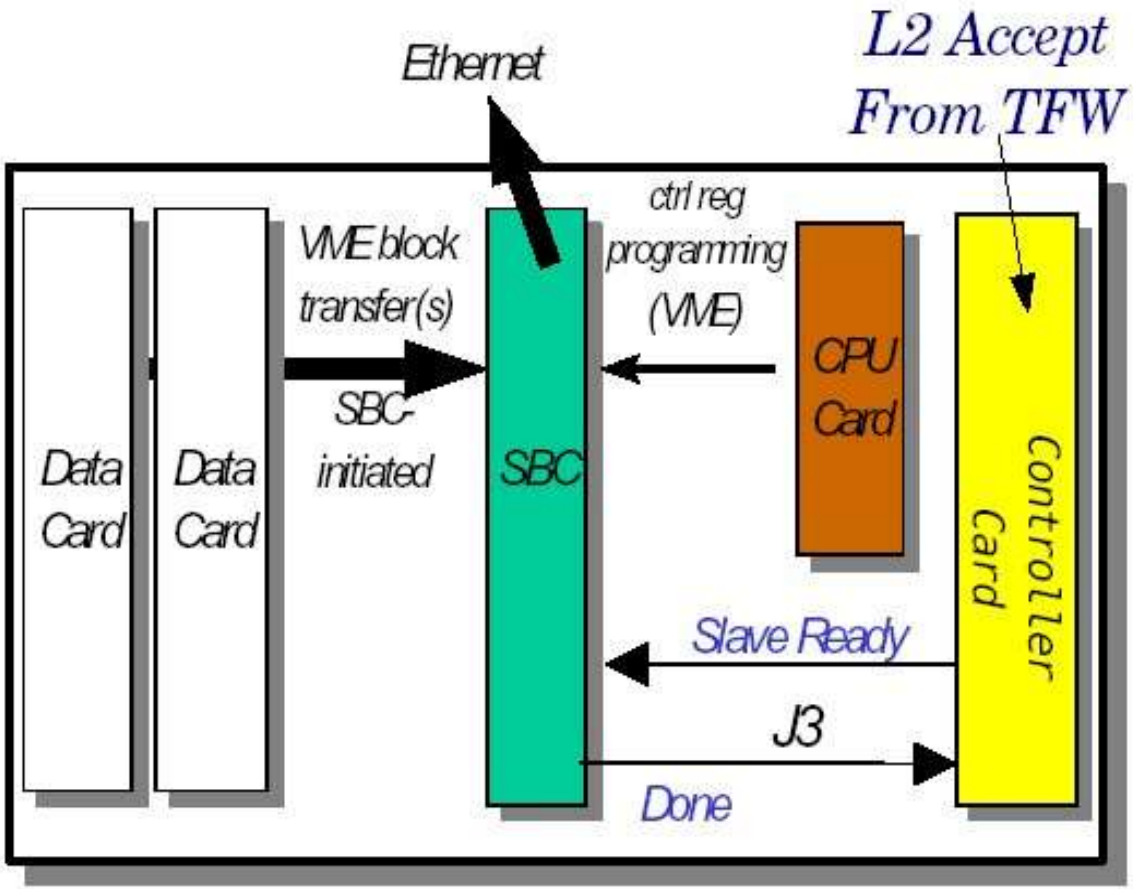

•Data card, CPU, and Controller cards specific to crate type

SCLInit

- SCLInit – What is that?
  - An SCLInit is the command from the trigger Framework through the Serial Command Link to all crates and modules to get them in sync.
    - This command stops data flow.
    - All crates on the SCL need to clear out their buffers and signal that they are ready.
    - Once all crates have responded, data flow is resumed.
    - The next event will now be in sync for all crates.
  - This command is automatically issued at the start of every run.
  - It can also be issued by hand or after a pause.
    - This is our first tool if something goes wrong.

L3 DAQ

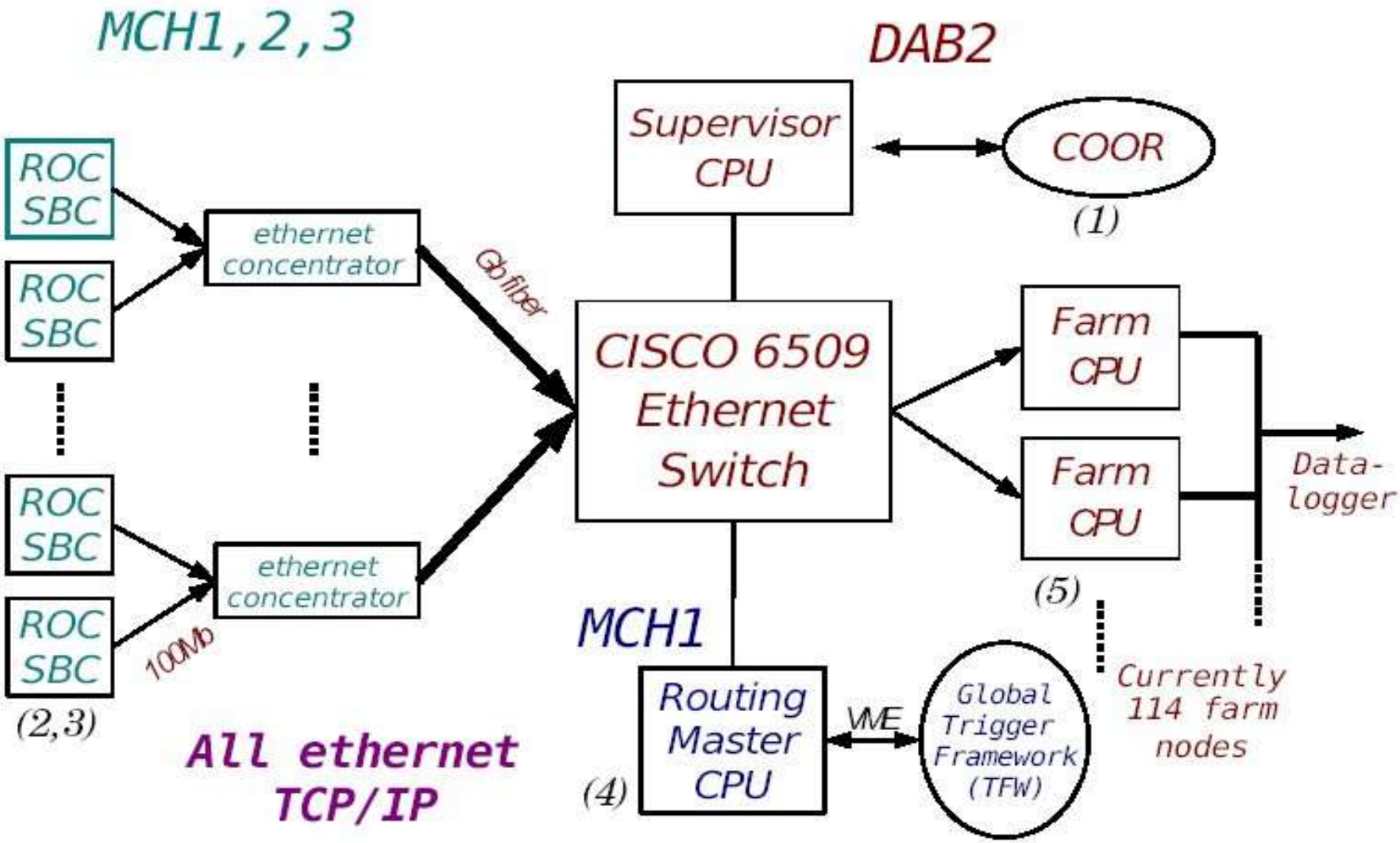
MCH1,2,3
DAB2
Supervisor CPU
COOR
(1)
ROC SBC
ROC SBC
ROC SBC
ROC SBC
ethernet concentrator
ethernet concentrator
Gb fiber
100Mb
(2,3)
CISCO 6509 Ethernet Switch
Farm CPU
Farm CPU
(5)
Data-logger
Currently 114 farm nodes
MCH1
Routing Master CPU
(4)
VME
Global Trigger Framework (TFW)
All ethernet TCP/IP

More information

- The DAQ shifter page has a lot on information: http://wwwd0online.fnal.gov/www/groups/daq/daq_main.html
  - Buddy Guide
  - Run Plan
- Feel free to contact me <billl@fnal.gov> if you have any questions.
- I will try to keep the DAQ shifter page up to date but let me know if there are any errors.