Level 2 Trigger Overview

L2 tutorial for DAQ shifters ...

Abaz Kryemadhi
University of Virginia
Miroslav Kopal
University of Oklahoma

Nov 1, 2005

Outline

- L2 Trigger Data Flow
  - L2 Crate description
- L2 Controls
  - L2 Trigger Control Computer
- L2 Monitoring
  - L2 Data Flow GUI
- L2 Operations
  - what you must know about L2
  - common problems and solutions
  - contacts and resources
    - where to find information about L2

L2 Trigger Data Flow – trigger framework

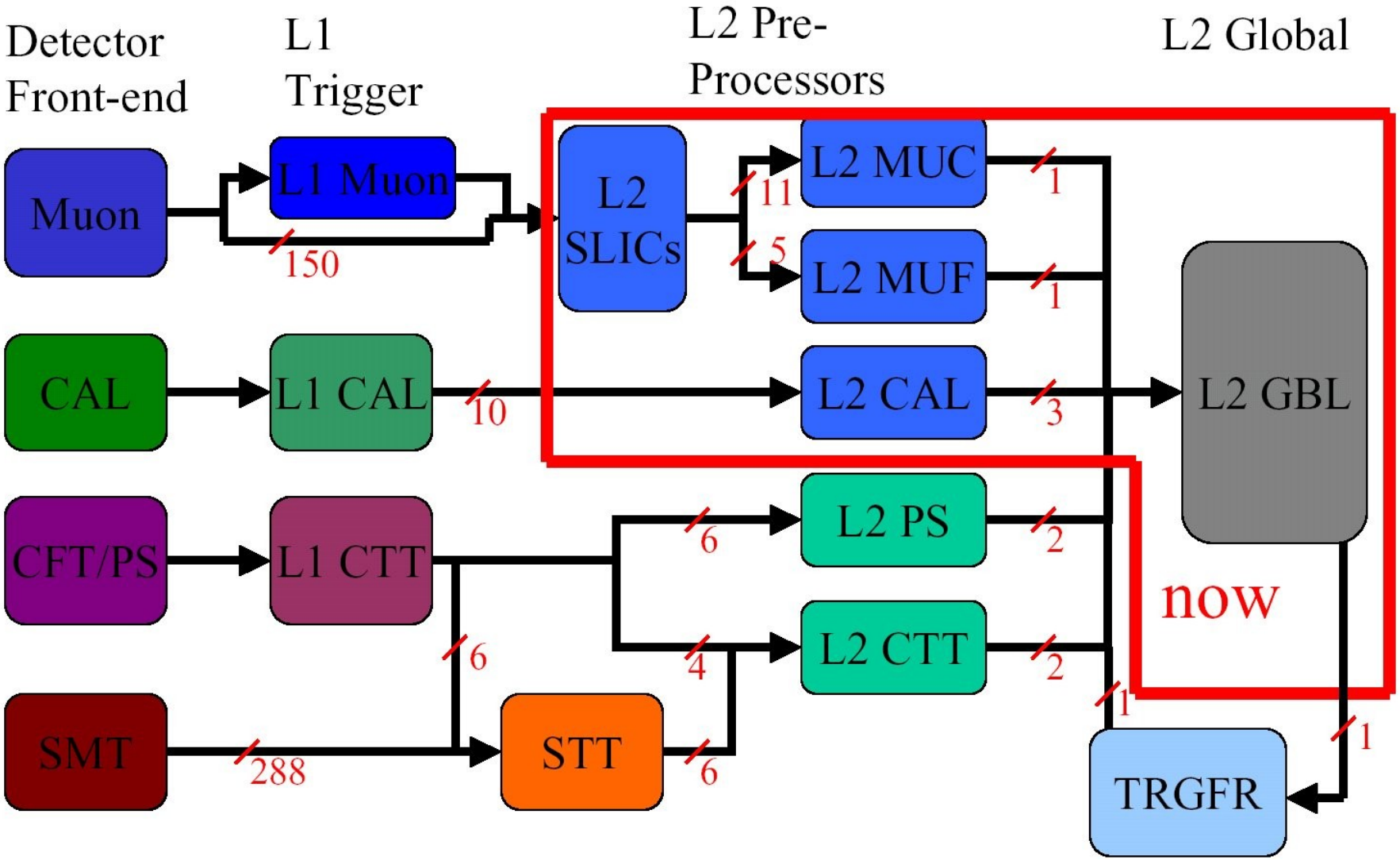

L2 Crates (L2ctt)

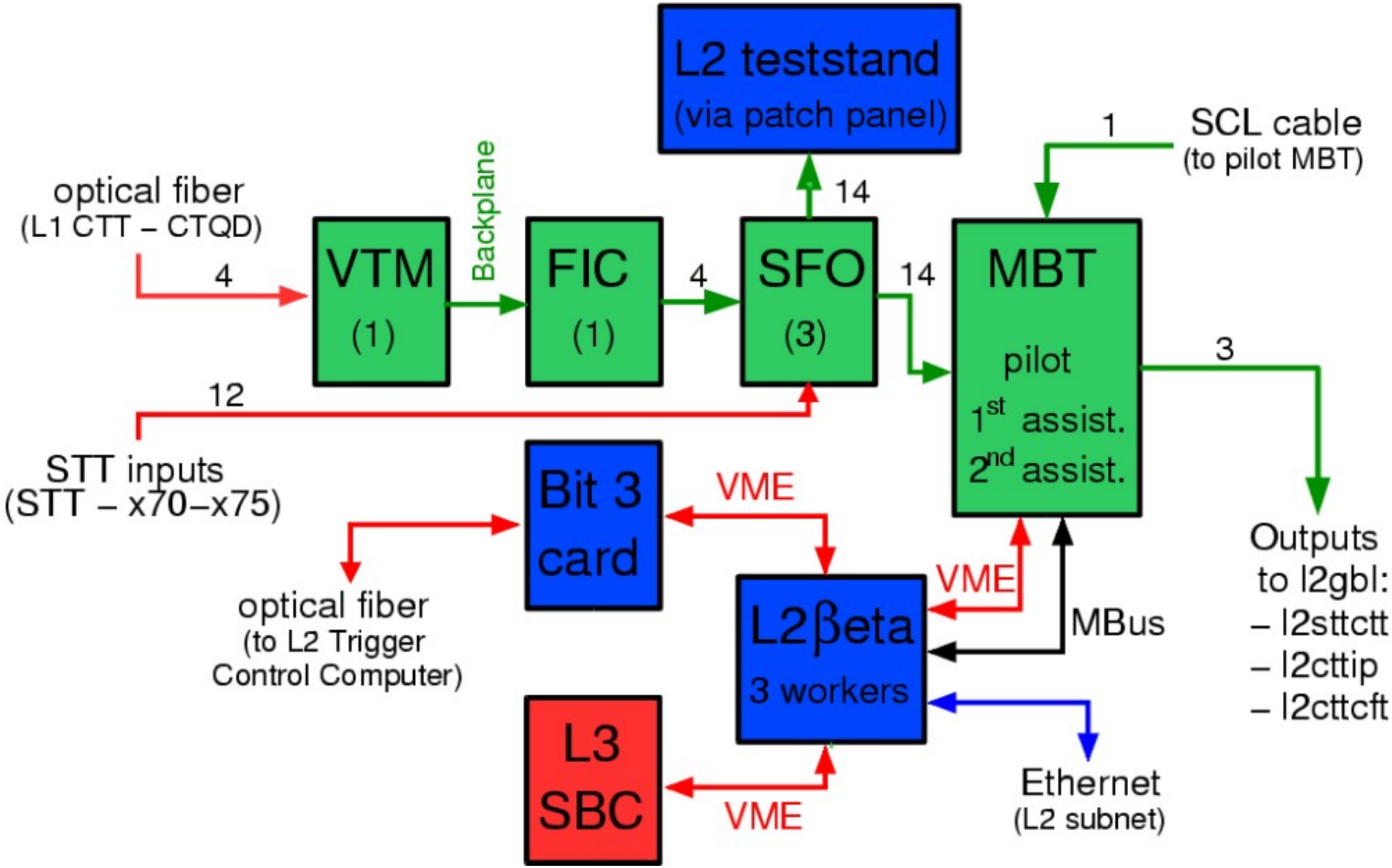

L2ctt crate

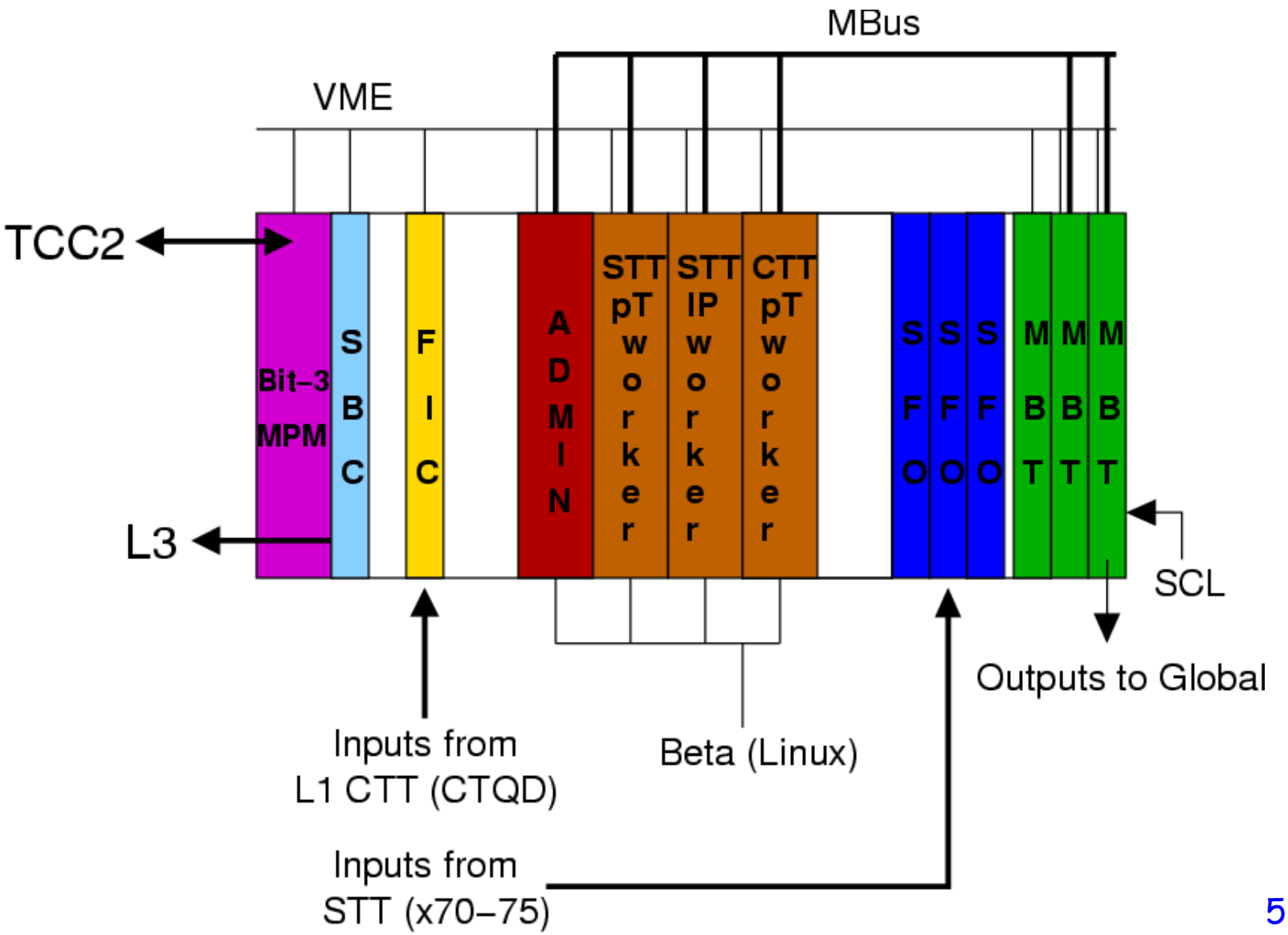

5

L2 crates (l2gbl)

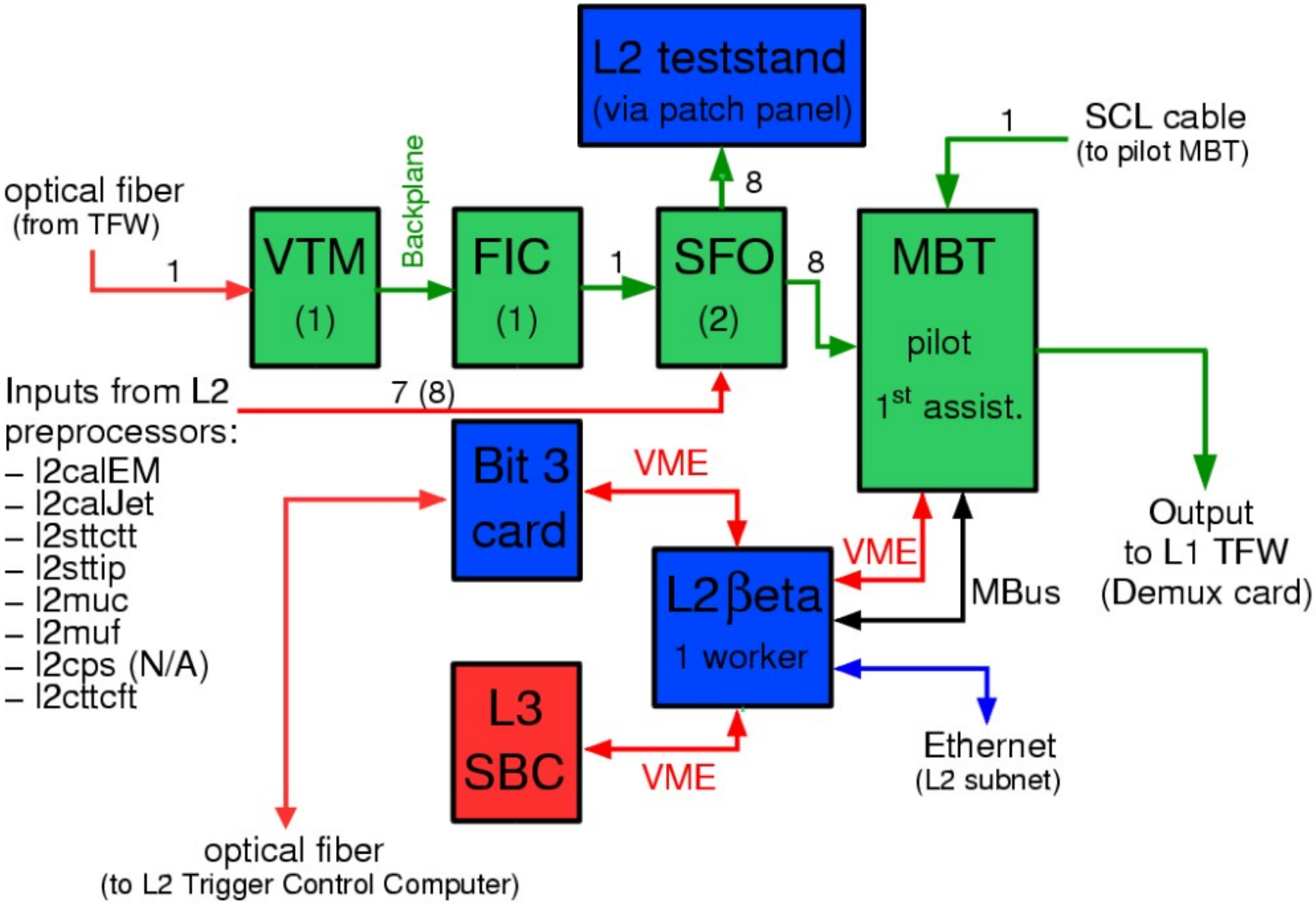

L2gbl crate

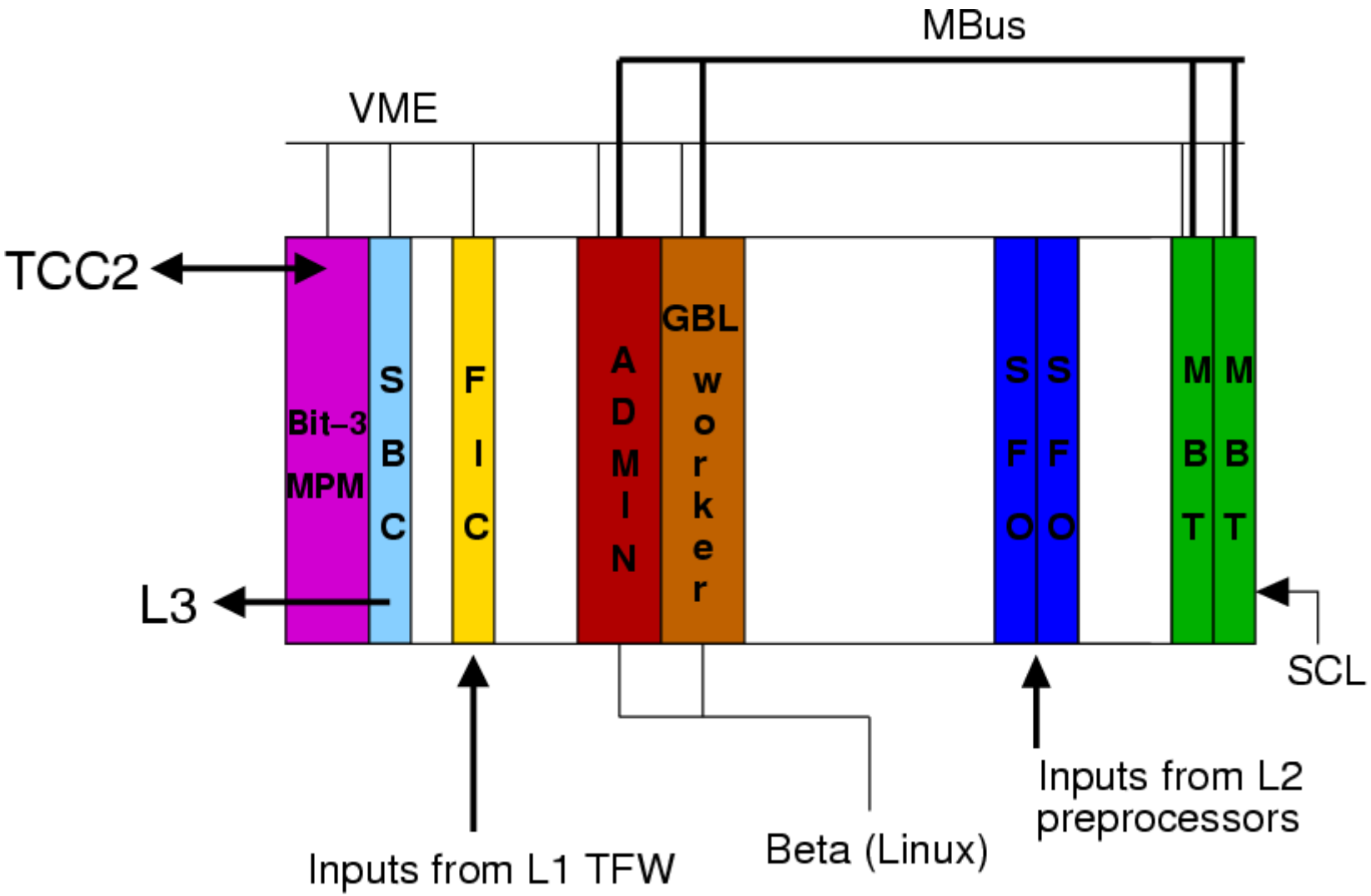
MBus
VME
TCC2
L3
Bit–3
MPM
S
B
C
F
I
C
A
D
M
I
N
GBL
w
o
r
k
e
r
S
F
O
S
F
O
M
B
T
M
B
T
SCL
Inputs from L1 TFW
Beta (Linux)
Inputs from L2
preprocessors

L2 Trigger Data Flow – single L2 crate

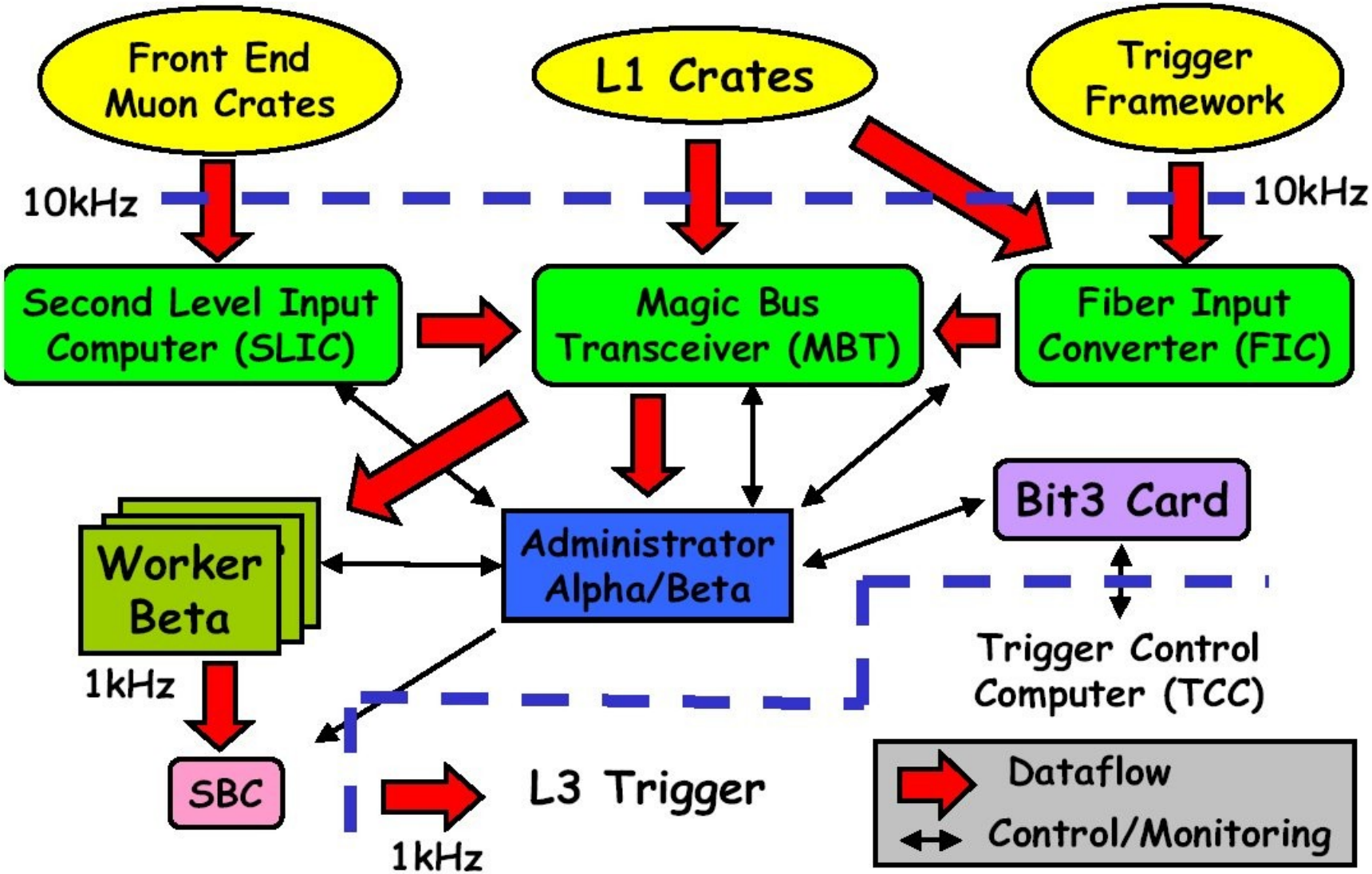

L2 Trigger Data Flow - configuration

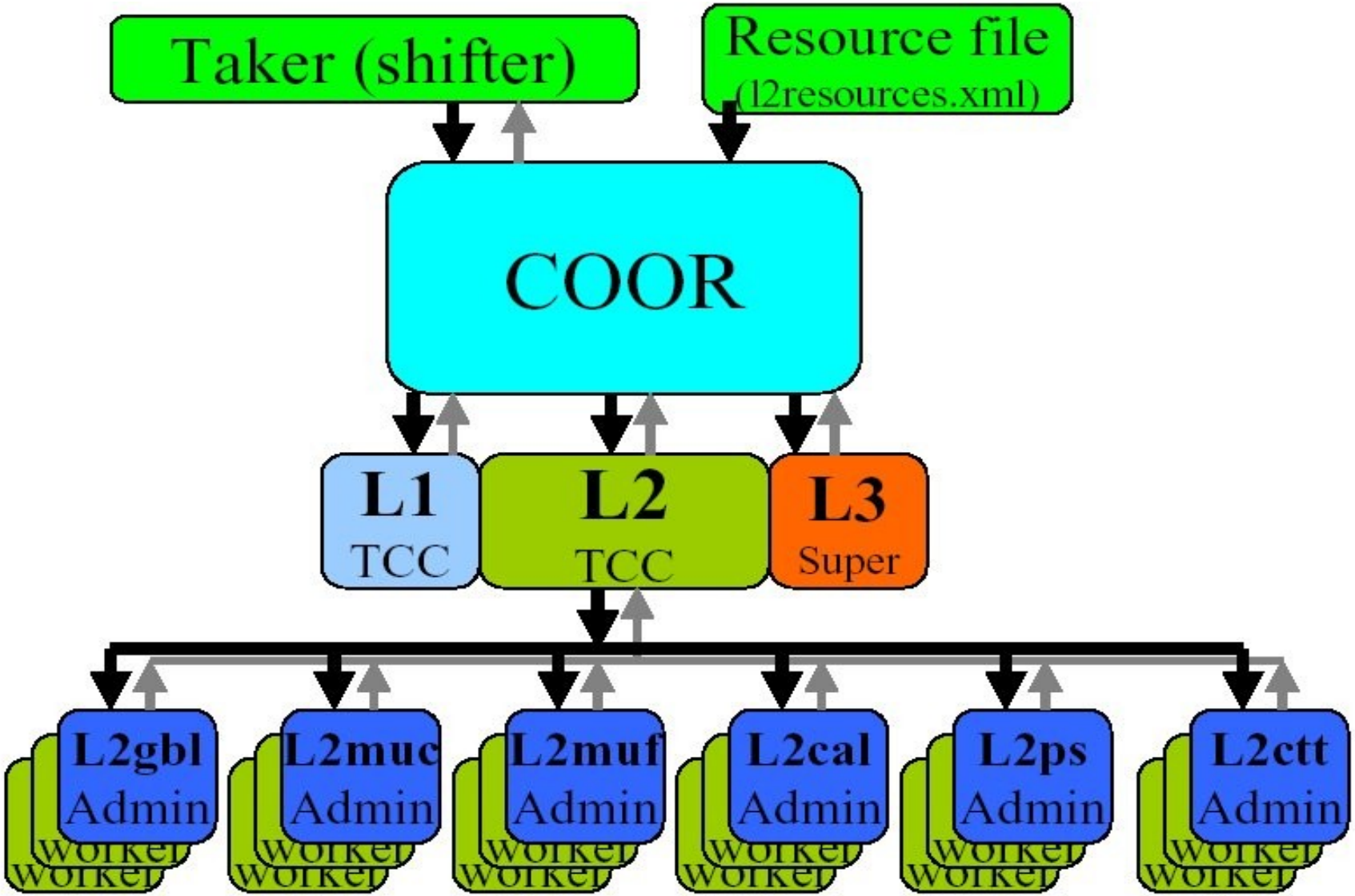

L2 Controls - TCC2

- Level 2 Trigger Control Computer (L2TCC or TCC2)
  - runs L2 Relay Software (or L2RS) ... next page
- interface to COOR and monitoring
- configures and controls all L2 crates
  - contains static configuration files for all L2 crates downloaded when COOR is initialized
  - forwards COOR messages to all L2 crates when run
    is being started or stopped

L2 Controls - L2RS

- *L2RS is equivalent to Trics in L1TCC*
- *provides an access to all L2 crates (only for L2 experts!)*
  - *send messages to L2 administrator, eg. Configure, exit/enter event loop, status report, etc. ...*
- *provides a log window with recent activity*
  - *monitoring information: I$*
  - *messages information from COOR (run start/stop): M$*
  - *error messages: E$, eg. "failure communication with admin" when there is a problem with L2 crate*

Useful, when debugging L2 problems. Look at it, but DO NOT touch it!

L2 Controls - L2RS

log messages (look here!)

crate interface (do not touch!)

L1FW Message to Self

L2 Fake COOR Messages

L2RS II

Send a Fake COOR Message to L2 TCC

Initialize | Start Run | Stop Run
L2 Crate List

Enter Evt Loop | Exit Evt Loop | Collect Status
Send CmdBuf | Dump Cmd Buf | Dump Status
L2 Script | Configure_Crate | Exit Program
Monit Level

L2 Global | L2 Cal | L2 Mu Cen
L2 Mu Fwd | L2 CTT | L2 PS

Load L2CTT CmdBuf... | Clear L2CTT CmdBuf

Dump_Status L2CTT

Send | Check Rep

Ok <Crate Status for L2CTT Crate><Done>

Send Message Command File (Each line must be a whole command

\Trics

Find... | Execute | Syntax Rule

Show Progress | Show Details

Done

L2RS V3.1_Rev A

```
I$ Monitor Data Length =0x000012dc for L2MuCen
I$ Monitor Data Length =0x00000f70 for L2MuFwd
I$ Monitor Data Length =0x00000e0c for L2Cal
I$ Monitor Data Length =0x00000da4 for L2PS
I$ Monitor Data Length =0x00000db0 for L2CTT
I$ Err Msg Data Length =0x00000005 for L2Global
I$ Err Msg Data Length =0x00000005 for L2MuCen
I$ Err Msg Data Length =0x00000005 for L2MuFwd
I$ Err Msg Data Length =0x00000005 for L2Cal
I$ Err Msg Data Length =0x00000005 for L2PS
I$ Err Msg Data Length =0x00000005 for L2CTT
I$ Monitor Data Length =0x0000101c for L2Global
I$ Monitor Data Length =0x000012dc for L2MuCen
I$ Monitor Data Length =0x00000f70 for L2MuFwd
I$ Monitor Data Length =0x00000e0c for L2Cal
I$ Monitor Data Length =0x00000da4 for L2PS
I$ Monitor Data Length =0x00000db0 for L2CTT
I$ Err Msg Data Length =0x00000005 for L2Global
I$ Err Msg Data Length =0x00000005 for L2MuCen
I$ Err Msg Data Length =0x00000005 for L2MuFwd
I$ Err Msg Data Length =0x00000005 for L2Cal
I$ Err Msg Data Length =0x00000005 for L2PS
I$ Err Msg Data Length =0x00000005 for L2CTT
I$ Monitor Data Length =0x0000101c for L2Global
I$ Monitor Data Length =0x000012dc for L2MuCen
I$ Monitor Data Length =0x00000f70 for L2MuFwd
I$ Monitor Data Length =0x00000e0c for L2Cal
I$ Monitor Data Length =0x00000da4 for L2PS
I$ Monitor Data Length =0x00000db0 for L2CTT
I$ Err Msg Data Length =0x00000005 for L2Global
I$ Err Msg Data Length =0x00000005 for L2MuCen
I$ Err Msg Data Length =0x00000005 for L2MuFwd
I$ Err Msg Data Length =0x00000005 for L2Cal
I$ Err Msg Data Length =0x00000005 for L2PS
I$ Err Msg Data Length =0x00000005 for L2CTT
I$ Monit Flag for L2Cal Crate on Adapter #3= Admin Writing->TCC Waiting
I$ Monit Flag for L2PS Crate on Adapter #4= Admin Writing->TCC Waiting
I$ Monit Flag for L2CTT Crate on Adapter #5= Admin Writing->TCC Waiting
I$ Err Msg Data Length =0x00000005 for L2Global
I$ Err Msg Data Length =0x00000005 for L2MuCen
I$ Err Msg Data Length =0x00000005 for L2MuFwd
I$ Err Msg Data Length =0x00000005 for L2Cal
I$ Err Msg Data Length =0x00000005 for L2PS
I$ Err Msg Data Length =0x00000005 for L2CTT
I$ Monitor Data Length =0x0000101c for L2Global
I$ Monitor Data Length =0x000012dc for L2MuCen
I$ Monitor Data Length =0x00000f70 for L2MuFwd
I$ Monitor Data Length =0x00000e0c for L2Cal
I$ Monitor Data Length =0x00000da4 for L2PS
I$ Monitor Data Length =0x00000db0 for L2CTT
```

L2 L2 L2 L2 L2 L2 L2 L2 L2

Start | L2RS V3.1_Rev A | L2 Relay Software | D:\Trics\D0_Config | 12:59 AM

L2 Controls - L2RS

```
m$  INPUT_DIR10 = 4, # ID 0x16?
I$Process Msg Command : <L2 Script for L2MuFwd Crate>
I$<Done>
M$Receive Msg  # 2002 : 0000000000000107673 l2script L2CAL ADMIN IPMANAGER {
m$  ALPHACH0 = 1,
m$  ALPHACH1 = 0,          # none
m$  ALPHACH2 = 1,          # L1CAL 1
m$  ALPHACH3 = 1,          # L1CAL 2
m$  ALPHACH4 = 1,          # L1CAL 3
m$  ALPHACH5 = 1,          # L1CAL 4
m$  ALPHACH6 = 1,          # L1CAL 5
m$  ALPHACH7 = 1,          # L1CAL 6
m$  ALPHACH8 = 0,          # L1CAL 7
m$  ALPHACH9 = 0,          # L1CAL 8
m$  ALPHACH10 = 0,          # L1CAL 9
m$  ALPHACH11 = 0,          # none
m$  ALPHACH12 = 0,          # none
m$  ALPHACH13 = 0
m$L2CAL ADMIN PILOTMBT {
m$  VMESLOT = 20,    # VME slot number of the card
m$  CHAN0 = -1,          # none
m$  CHAN1 = 2,          # L1CAL 1
m$  CHAN2 = 3,          # L1CAL 2
m$  CHAN3 = 4,          # L1CAL 3
m$  CHAN4 = 5,          # L1CAL 4
m$  CHAN5 = 6,          # L1CAL 5
m$  CHAN6 = 7,          # L1CAL 6
m$  CHAN7 = 0,          # SCL
m$  DISP_CHAN = 7,    # Channel to display on the MBT front panel
m$  TEST_SCL = 0,    # Disable testing mode
m$  CYCLE_BUFFERS = 1,# cycle the b?
I$Process Msg Command : <L2 Script for L2Cal Crate>
I$<Done>
M$Receive Msg  # 2003 : 0000000000000107675 start_run 173228 4
I$Process Msg Command : <Start Run #173228 for Spec Trig(s) #  4>
```

```
I$ Admin has noticed the new commands for L2MuFwd Crate: TCC Waiting
I$ Admin Replied Ok for L2MuFwd Crate
I$<Done>
I$Process Msg Command : <Start Run for L2Cal Crate>
I$ Err Msg Data Length =0x0000016d for L2MuFwd
I$ Monitor Data Length =0x0000103d for L2MuFwd
I$ Sending TCC->L2Cal Admin Command <EXIT_EVENTLOOP>
I$ Waking Up L2Cal Admin
I$ Waiting for L2Cal Admin Reply
I$ Admin Replied Ok for L2Cal Crate
I$ Relaying COOR Commands to L2Cal Buffer - 1 Commands, 1781 Bytes
I$ Waking Up L2Cal Admin
I$ Waiting for L2Cal Admin Reply
I$ Admin has noticed the new commands for L2Cal Crate: TCC Waiting
I$ Admin Replied Ok for L2Cal Crate
I$ Clearing L2Cal Crate Command Buffer
I$ Sending TCC->L2Cal Admin Command <ENTER_EVENTLOOP>
I$ Waking Up L2Cal Admin
I$ Waiting for L2Cal Admin Reply
I$ Err Msg Data Length =0x00000005 for L2Cal
I$ Monitor Data Length =0x00000dd5 for L2Cal
I$ Admin has noticed the new commands for L2Cal Crate: TCC Waiting
I$ Admin Replied Ok for L2Cal Crate
I$<Done>
I$<Done>
I$ Err Msg Data Length =0x00000005 for L2Global
I$ Err Msg Data Length =0x00000221 for L2MuCen
```

COOR Download

Good Start Run

```
I$ Sending TCC->L2MuCen Admin Command <COLLECT_STATUS>
I$ Waking Up L2MuCen Admin
I$ Waiting for L2MuCen Admin Reply
E$ Timeout waiting for Admin to Wake Up for L2MuCen Crate: TCC Give Up
I$ Sending TCC->L2Cal Admin Command <COLLECT_STATUS>
I$ Waking Up L2Cal Admin
I$ Waiting for L2Cal Admin Reply
E$ Timeout waiting for Admin to Wake Up for L2Cal Crate: TCC Give Up
I$ Sending TCC->L2MuFwd Admin Command <COLLECT_STATUS>
I$ Waking Up L2MuFwd Admin
I$ Waiting for L2MuFwd Admin Reply
E$ Timeout waiting for Admin to Wake Up for L2MuFwd Crate: TCC Give Up
I$ Sending TCC->L2Global Admin Command <COLLECT_STATUS>
I$ Waking Up L2Global Admin
I$ Waiting for L2Global Admin Reply
E$ Timeout waiting for Admin to Wake Up for L2Global Crate: TCC Give Up
I$ Sending TCC->L2MuCen Admin Command <COLLECT_STATUS>
I$ Waking Up L2MuCen Admin
```

messages: problem with L2 crates: L2MUF, … to TCC

L2 Monitoring

SLIC inputs (muon channels)

error/status light

processing time

crate inputs (MBT channels)

unused or disabled inputs

switch between channel/crate and occupancy

L1/L2 rates

L1/L2 FEB

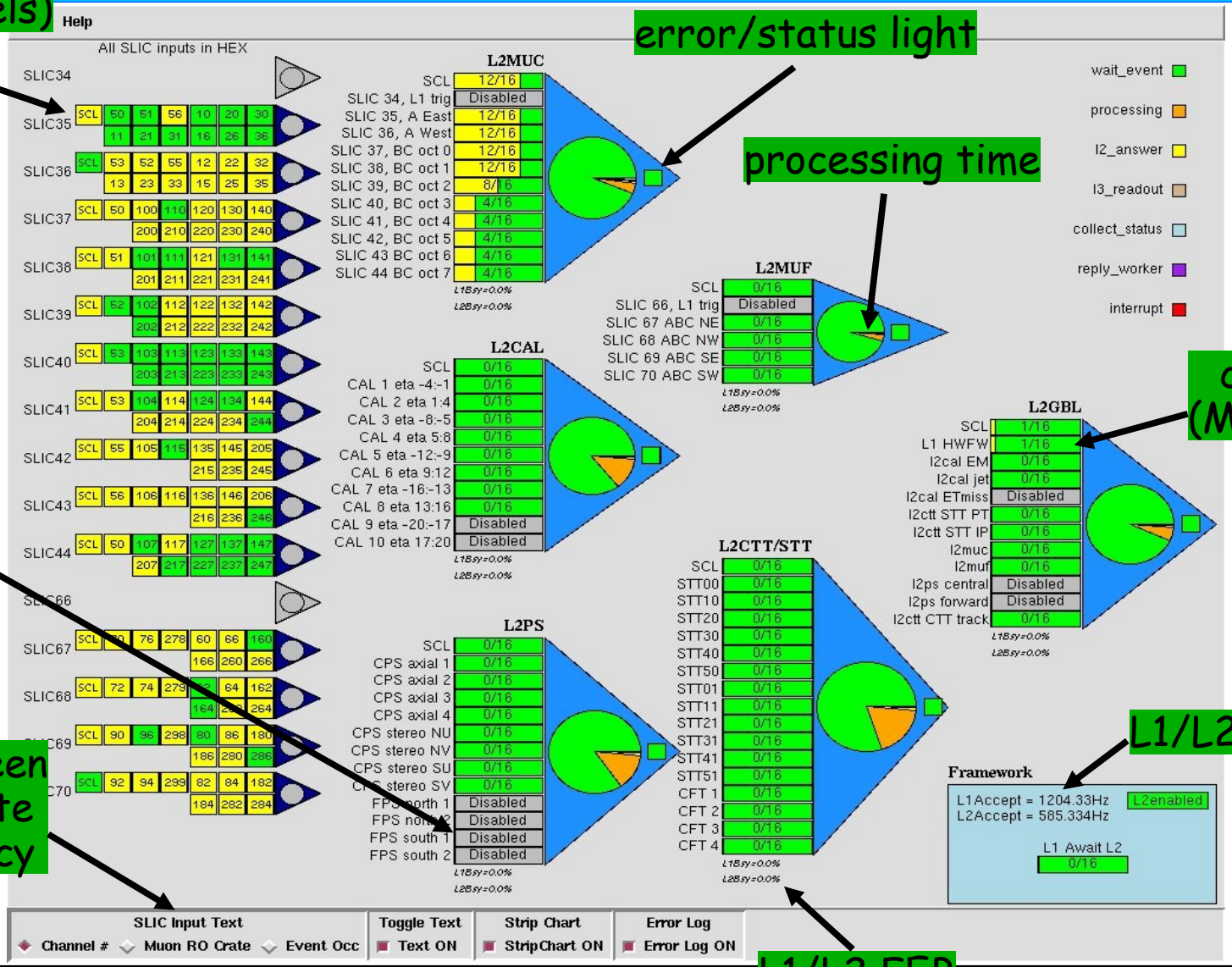

L2 Monitoring

- Level 2 data flow GUI (l2df)
  - information flow ⇒ read it as it flows from left to right
- MDT/PDT/scintillator channels = SLICs' inputs

muon crates (x30-3b) → L2 SLICs →
→ L2MUC (x21) or/and L2MUF (x22)

L1CAL (x10) → L2CAL (x23)
... no inputs from CAL crates (x40-4c)

L1CTT (---) → L2PS (x24)
... no inputs for FPS

L1CTT (---) → L2CTT (x25)
... crate x13 is only L1CTT readout crate – does not send any data to L2

L1TFW+L2 → L2GBL (x20)

L2 Monitoring

- big triangles
  - L2 preprocessors – crates' administrator
- pie charts
  - timing information: await/idle an event, processing, L2 answer, L3 readout, collect status, worker replay, interrupt
- framework information
  - L1 and L2 rates, L1 await L2
- l2df GUI
  - every 5 seconds – monitoring information comes from the L3 monitor server's DAQMON scraper (l3ms_util_clients server)

L2 Monitoring

GREEN color = idle/empty

- empty input buffer
- SLIC/Beta in idle state
- TFW is not waiting for L2 global

RED color = error

- administrator errors (red box)
- input error

ORANGE or YELLOW = working

- processing event (orange)
- input buffers filled (yellow)

GRAY color = disable

L2 Monitoring

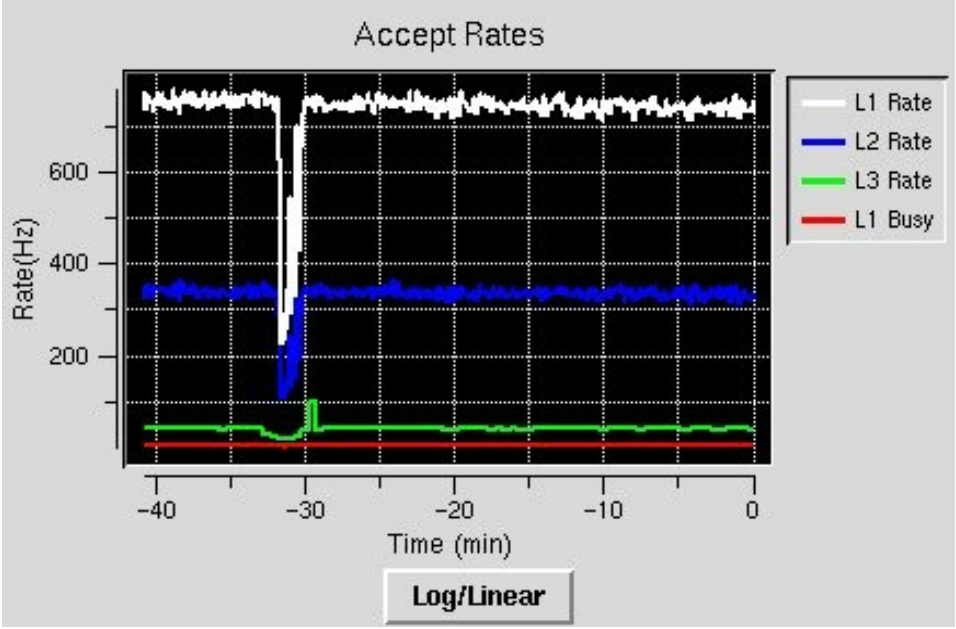

- stripmon - up to 70 min of L1, L2, L3 and FEB rates history
- available as stand alone plot (but usually, it is part of l2df)
  - global L1, L2 and L3 rates
  - specific triggers rates/FEB
  - geometric-sector rates and busies

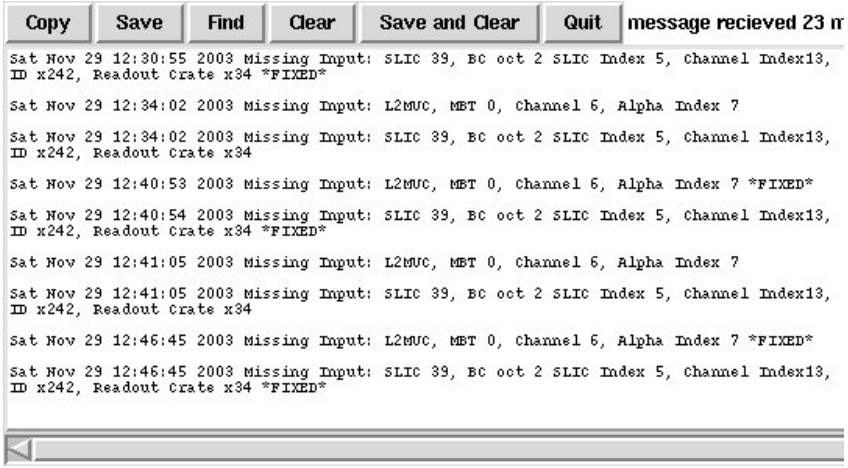

- L2 message box
  - information about missing inputs
  - time to the last missing input

L2 Operations

- DAQ shifter wants to start downloading global physics trigger list
  - check that all L2 crates are included in the run
- trigger list is being downloaded ...
  - L1 framework is configured, COOR sends new configuration to TCC2 and L3 supervisor is configured
- run is started ...
  - TCC2 sends to configuration to all L2 crates (only now L2 crates know which inputs are enabled/disabled)

L2 Operations

- When can you exclude a level 2 crate?
  1. CFT calibration
     - exclude x25 before the calibration
     - include x25 back in the readout when the calibration is finished
  2. when L2 expert asks you kindly (repair/test)
- How can DAQ shifter monitor L2?
  1. listen to daqAI, check üMon and daqdialog
     ↳ DAQ monitoring tools ↵
  2. check for presence of major L2 alarms
     ↳ alarm display ↵
  3. check l2df and messages in TCC2
     ↳ L2 monitoring tools ↵

L2 Operations

- What is actually an L2 problem?
  - What is a problem with L2 but does not look like?
  - What isn't a problem with L2 but looks like it is?

- How to diagnose DAQ/L2 problems?
- How to solve DAQ/L2 problems?

  (... I'm talking about some DAQ problems, only those L2-like, not all of them!)

L2 – what-to-do-if ...

Missing input

- **Diagnostics:**
  - often announced by daqAI and observed in üMon and l2df GUIs
  - l2muc, l2muf, l2ctt and l2ps often, but l2cal rarely
  - l2df shows inputs yellow (16/16), except one being green (0/16) and message box states which channel and crate is involved, this crate and input crates could be red in üMon
  - using l2df and üMon you must be able to diagnose the crate/channel which is not sending any data
- **Action:**
  - ask CALMUO (l2muc/l2muf/l2cal), CFT (l2ps/l2ctt) or SMT (l2ctt) shifter(s) to fix the inputs to L2 crate(s)

Fix the inputs to L2 first!

L2 – what-to-do-if ...

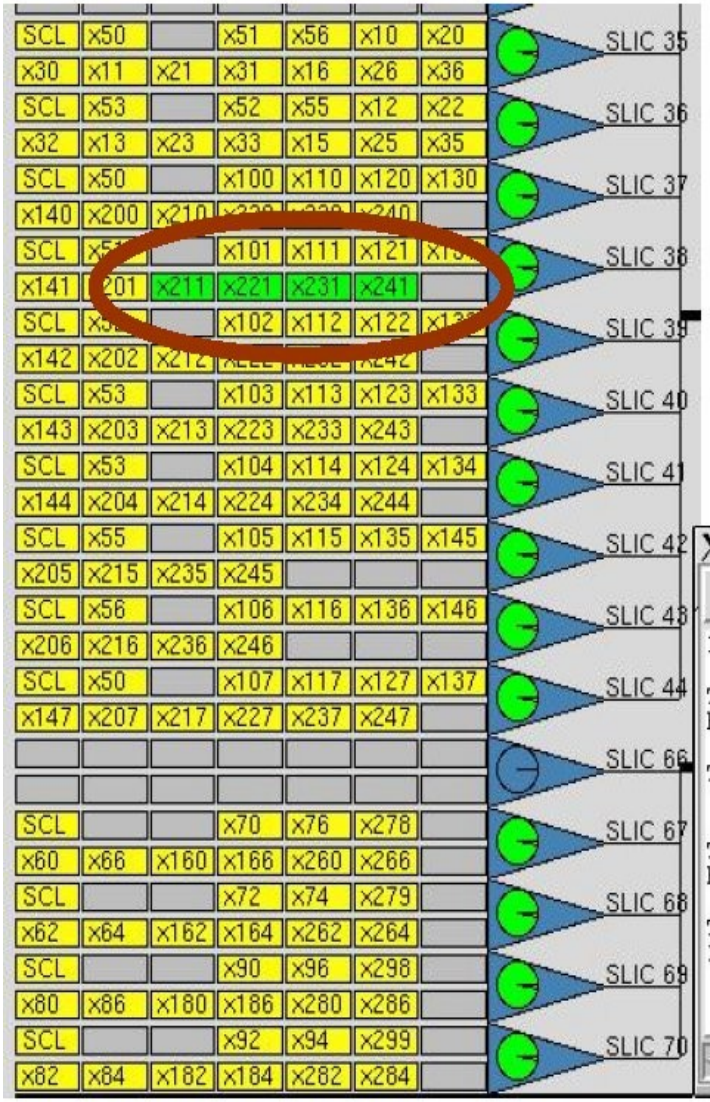

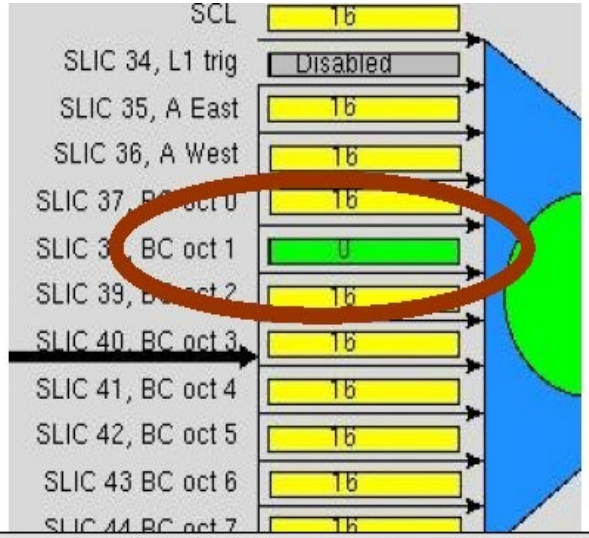

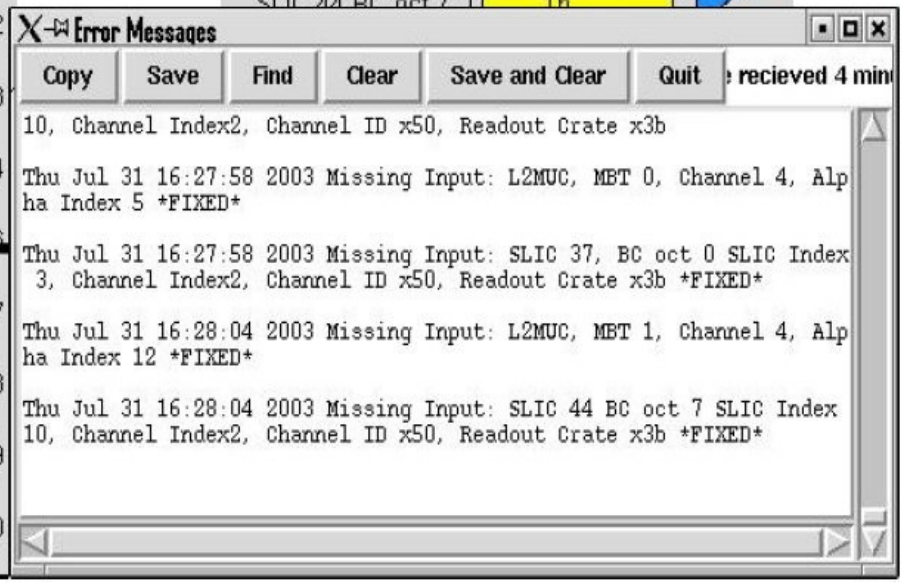

L2 – what-to-do-if ...

Corrupted input or crate/input is out-of-sy

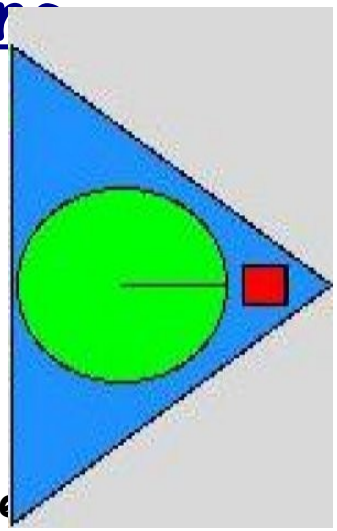

- **Diagnostics:**
  - rates are at zero and l2df shows an L2 crate red (interrupt)
  - L2RS on d0tcc2 might contain red error messages and crate is 100% FEB in daqdialog
- **Action:**
  - difficult to find out which inputs are out-of-sync. L2 expert ne look into the log L2 files and at l2mon. Meanwhile, you try:
    → `sclinit`
    → `l2reset <L2_crate_name>`
  - if it did not help, page the L2 expert

When doing `l2reset`, make sure that all runs are stopped!

L2 – what-to-do-if ...

L2 crate is 100% FEB

- **Diagnostic:**
  - L2 crate is red in daqdialog and/or in üMon. L2 crate is always 100% FEB when one of its inputs is missing or is corrupted/out-of-sync. This "problem" is some-how similar to the previous cases.
  - check l2df and L2RS on d0tcc2 for any additional information
- **Action:**
  - first, try:
    → sclinit
    → l2reset <L2_crate_name>
  - if it did not help, page the L2 expert

L2 – what-to-do-if ...

COOR ↔ L2 problems

- **Diagnostic:**
  - L2 crate is not configured properly – this will be immediately noticed by the DAQ shifter because of red messages in taker. Red error messages will also appear in L2RS on d0tcc2.
  - if you see red l2dnl in coormon, your last coor_reinit or l2reset failed
- **Action:**
  - red messages in taker – failed to start a run: if you just applied l2reset to l2muc/l2muf, wait ~30 sec and try again. SLICs need some time to boot up.
  - in other cases, try:
    → `l2reset <L2_crate_name>`
  - if this did not help, you need expert's assistance – page the L2 expert

L2 – what-to-do-if ...

L2 rack tripped

- **Diagnostic:**
  - you should see L2 major alarms in the alarm display
  - d0tcc2 is frozen, because it cannot talk/connect to L2 crates in the tripped rack
- **Action:**
  - page the OP shifter, and page the L2 expert – he could ask you to try to turn-on the rack. If you are not able to do so, you must page one of Fermilab's electrical personnel (eg. John Anderson).
  - ... this is bad ...

L2 – what-to-do-if ...

Other problems

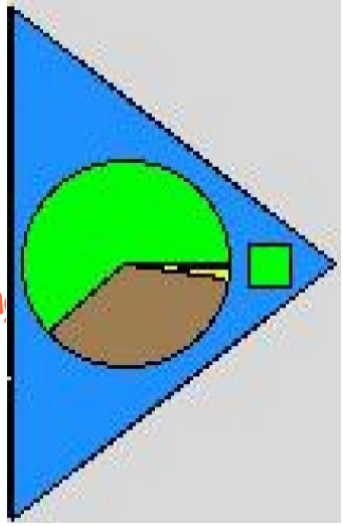

- SBC problem
  - non-standard problem with L3 SBC in an L2 crate would exhibit itself in l2df as brown pie chart instead of oran
  - try "`l2reset <L2_crate_name>`", then page the L3 and L2 experts
- L2GBL problem
  - you do not see any L2 crate with red square in l2df, or missing inputs to L2, nor any crates being red in üMon, but you might see "x1f" 100% FEB (plus other, slower, crates). The only other unusual thing is in l2df:
  - try "`l2reset <L2_crate_name>`" on L2GBL, then page the L2 expert

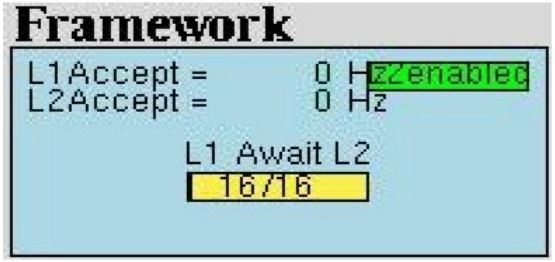

L2df - downloaded zero_bias trigger list

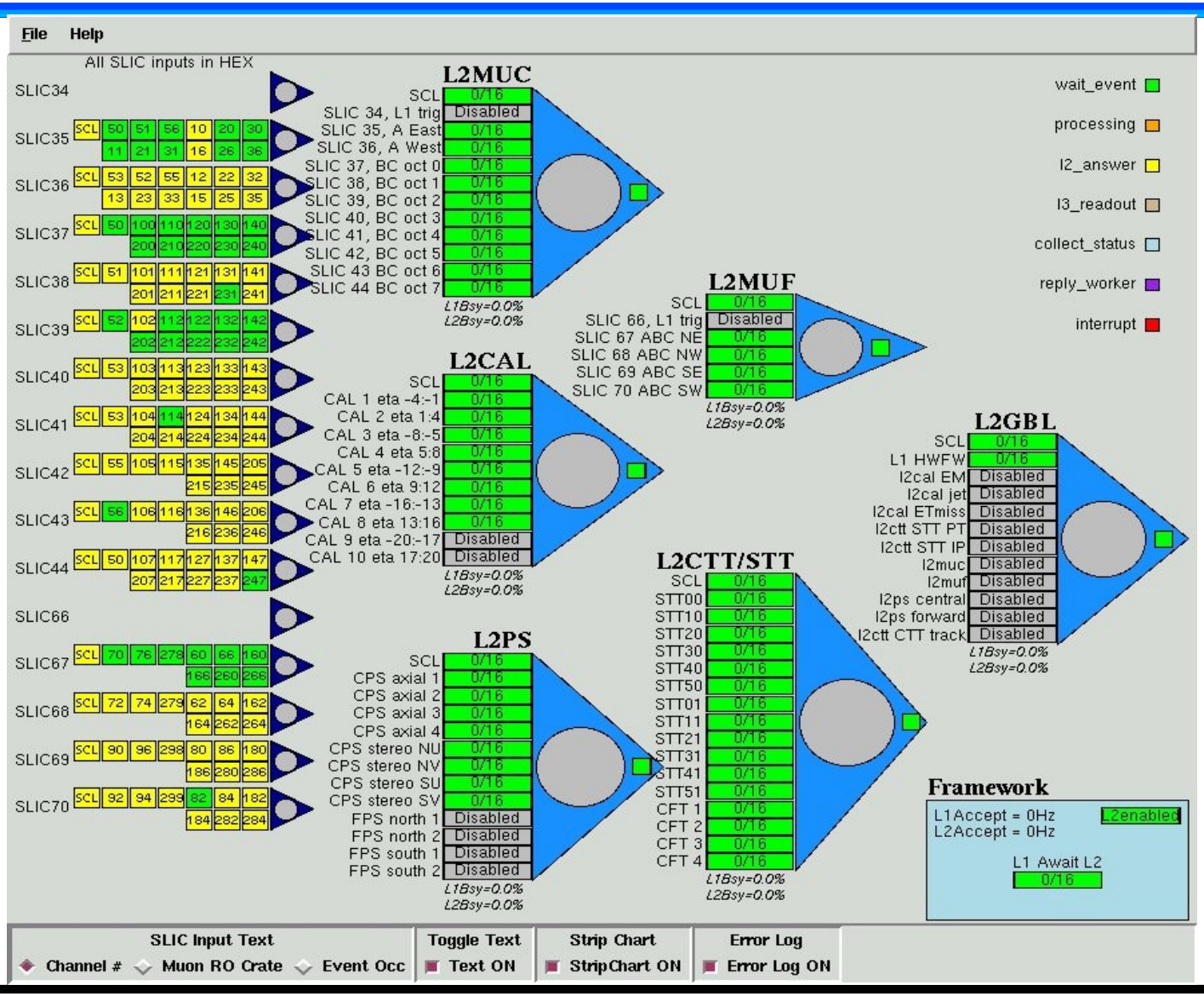

L2df - loading a trigger

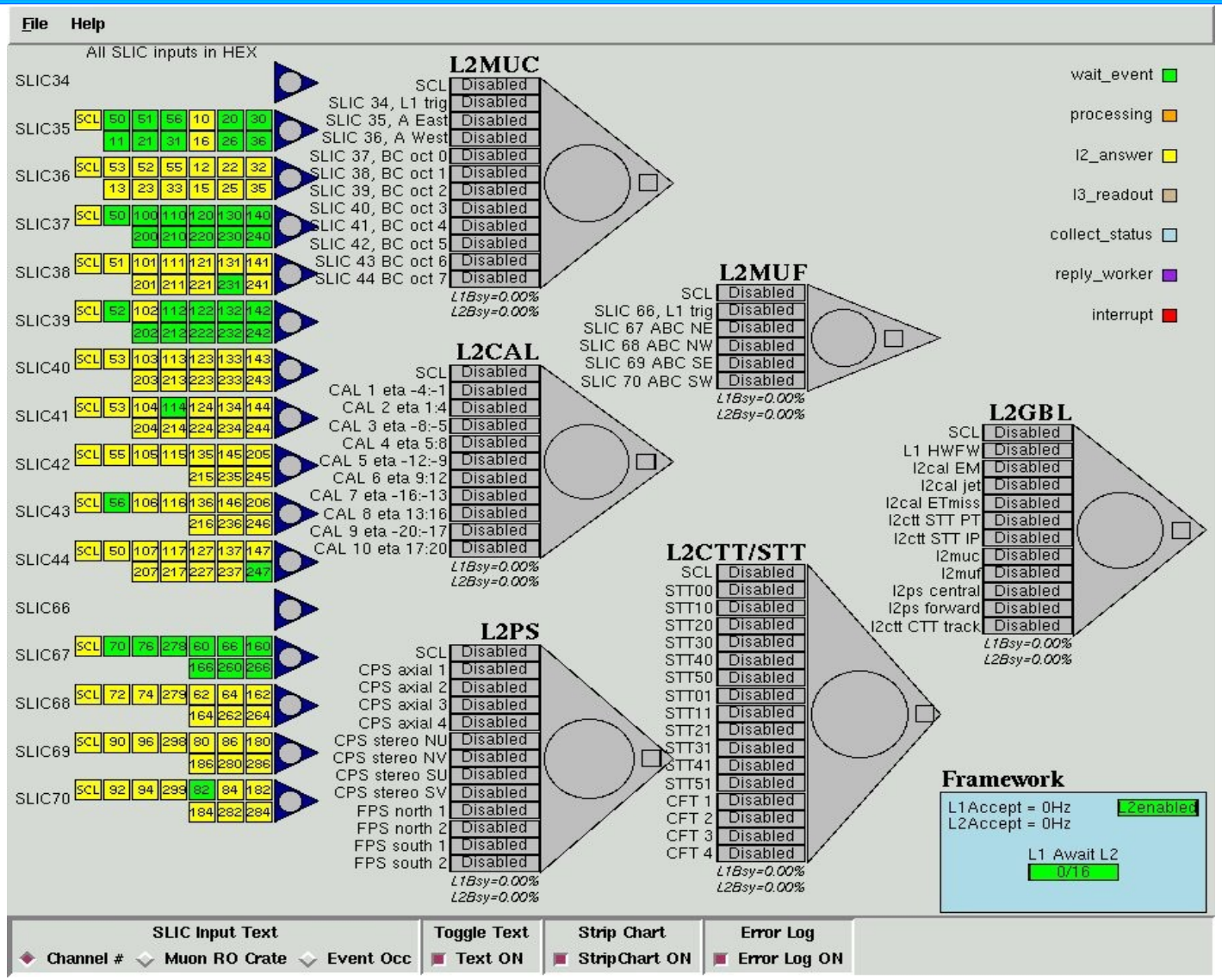

L2df - global physics run (almost perfect)

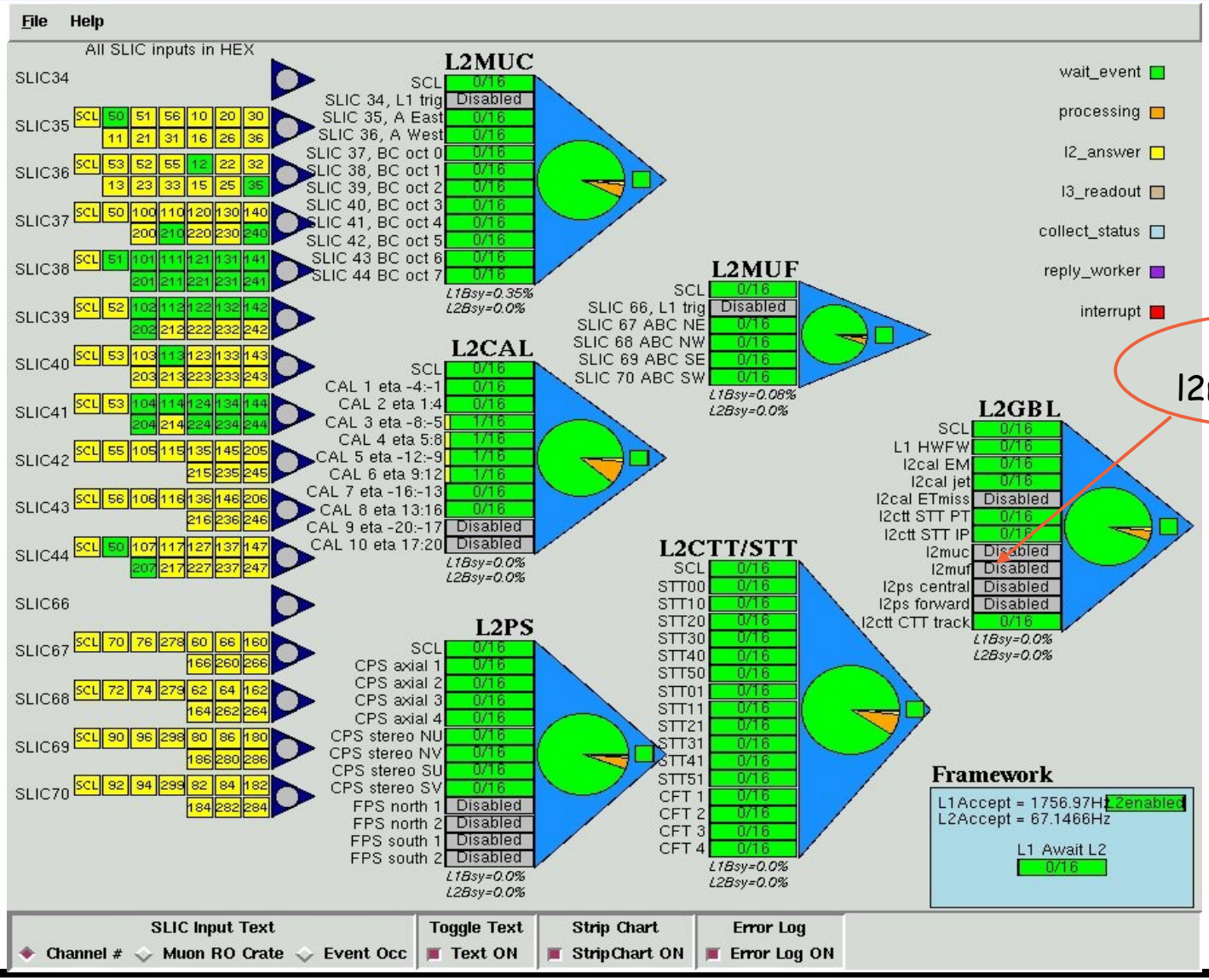

missing l2muc+l2muf

L2df - l2gbl is crashed ...

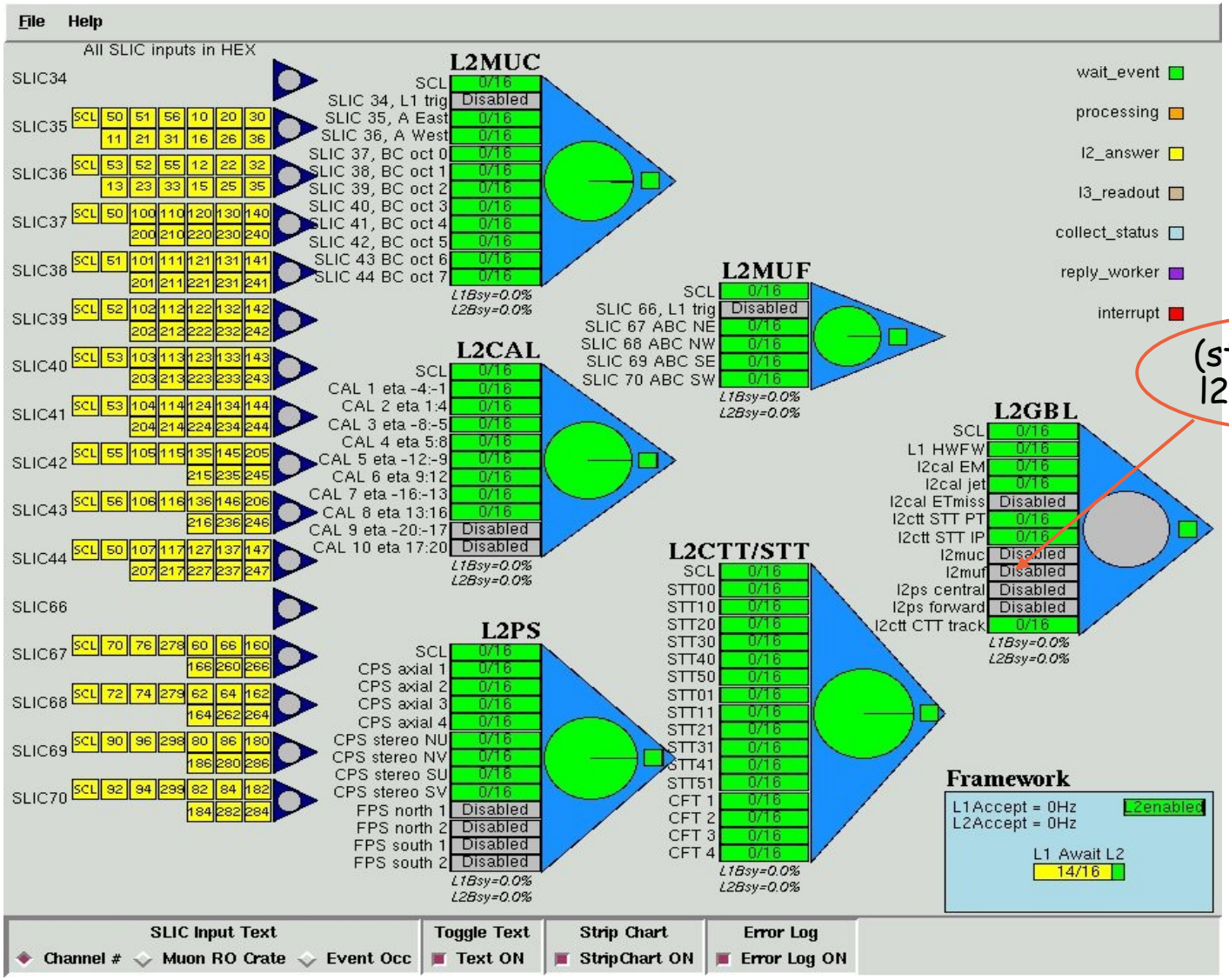

(still) missing l2muc+l2muf

L2 Experts – conacts

- What are the duties of L2 experts?
  - diagnose and fix L2 problems
  - apply L2 hammers - medium and large
  - we often help to diagnose DAQ problems and deter-mine whether it is a problem with L2, or not. Certain-ly, we will (should) try to help.
- How to contact L2 experts?
  - DØ building pager: x4674
  - primary pager: (630) 266-0744
  - or (the last resort) secondary pager: (630) 266-0750

L2 Resources

- Where to find L2 documentation?
  It is available from L2 web pages:

  General L2 web page:

  www.pa.msu.edu/hep/d0/l2

  L2 online web page:

  www-d0online.fnal.gov/www/groups/trigger/l2/online

  L2 DAQ web page:

  www-d0online.fnal.gov/www/groups/trigger/l2/online/daq_shifter/index.html

  L2 expert web page:

  www-d0online.fnal.gov/www/groups/trigger/l2/online/expert/index.html